VGS

# PRODUCT CATALOGUE

Our technology is the guarantee of your extraction

# CONTENTS


CONTENTS 2
PERFORATING SYSTEMS 5
DESCRIPTION 6
TECHNICAL FEATURES 7
TECHNICAL FEATURES 8
WIRELINE CONVEYED PERFORATING SYSTEM BLASTING CARTRIDGE ON THE TOP 10
WIRELINE CONVEYED PERFORATING SYSTEM BLASTING CARTRIDGE ON THE TOP 11
WIRELINE CONVEYED PERFORATING SYSTEM BLASTING CARTRIDGE ON THE BOTTOM 12
WIRELINE CONVEYED PERFORATING SYSTEM BLASTING CARTRIDGE ON THE BOTTOM 13
WIRELINE CONVEYED PERFORATING SYSTEM BLASTING CARTRIDGE ON THE TOP 14
TUBING CONVEYED PERFORATING SYSTEMS 15
PK50KL ORION WIRELINE CONVEYED PERFORATING SYSTEMS 16
PK50KL ORION COIL TUBING CONVEYED PERORATING SYSTEMS WITH CABLE GLAND 17
ORIENTED PERFORATION 18
PK105KL ORION WIRELINE CONVEYED REUSABLE PERFORATING SYSTEM 19
PERFORATOR COMPONENTS 20
TOOLS AND ACCESSORIES 35
RUNNING ACCESSORY 36
CABLE HEAD 37
SAFETY CONTAINER 37
RUNNING SUB 38
ACCESSORY FOR RIH/POOH OPERATIONS OF WIRELINE CONVEYED PERFORATORS 39
SAFETY SPACER 41
SPECIAL TOOL FOR CRIMPING 42
CHARGE TUBE INSTALLATION WRENCH 42
HANDLE TO CARRY OVER PERFORATOR CARRIERS 42
DETONATING CORD CRIMPING TOOL 43
CORD CUTTER 43
RAMROD 43
SUBS AND SLEEVES 44
DRIFTS 46
PERFORATOR ASSEMBLING STAND 47
CABLE CLEANNING TOOL 47
BARS 48
BAR FISHING TOOL 48
SUB (FROM CABLE HEAD TO PERFORATING HEAD) 49
PERFORATOR FISHING TOOL (SHORT GRAB TYPE 85/66(60)) 49
DIFFERENTIAL PRESSURE SUB 50
ISOLATION SUB 51
FILL/FLOW SUB (SLUDGE TRAP) 52
PRESSURE RELEASE SUB 53
FIRING HEADS 55
ORION-01 MECHANICAL FIRING HEAD 56
ORION-02 HYDROMECHANICAL FIRING HEAD 58
ORION-03 CIRCULATING AND NON-CIRCUALTING FIRING HEAD 60
ORION-04 AUTO RELEASE MECHANICAL FIRING HEAD 62
ORION-05 AUTO RELEASE HYDRAULIC FIRING HEAD 64
ORION-06 HYDRAULIC FIRING HEAD FOR SETTING TOOL 66
RUBEZH-ORION 11-73 ELECTRONIC HEAD WITH TIME DELAY OPERATION 68
EQUIPMENT OF VGS 70
PSh ORION SLIPS PACKER 72
PPR PRORION DRILLABLE THROUGH PLUG 74
SETTING TOOL 76
ORION EXPLOSIVE CEMENT DUMP BAILER 78
EQUIPMENT FOR BREAKDOWN ELIMINATION. TK ORION TUBING CUTTER 80
EQUIPMENT FOR WORK PERFORMANCE ON WIRELINE 82
NKB60-3 FOR WELL GEOPHISICAL SURVEY 82
ORION-76 SLEEVE LOCATOR 84
EQUIPMENT FOR CASING LEAK REPAIR 86
CASING/TUBING PATCH TECHNOLOGIES 86
HYDRAULIC SETTING TOOL 88
MULTI-STAGE SETTING TOOL 89
TUBING PEFORATION TECHNOLOGIES 90
PERFORATION TECHNOLOGIES FOR MULTI-STAGE HYDROFRACTURING 91
TUBING PERFORATION IN HORIZONTAL WELLS 92
NOTES 94

# PERFORATING SYSTEMS

PK50KL ORION, PK63KL ORION,
PK73KL ORION, PK89KL ORION,
PK102KL ORION, PK114KL ORION,
PK105KL ORION

Expendable Perforating Systems 50KL ORION (hereafter PK50KL ORION), 63KL ORION (hereafter PK63KL ORION), 73KL ORION (hereafter PK73KL ORION), 89KЛ ORION (hereafter PK89KL ORION), 102KL ORION (hereafter PK102KL ORION), 114KL ORION (hereafter PK114KL ORION) are used for perforating oil, gas or other wells using any deployment method : wireline, tubing conveyed, Coiled Tubing.

Design advantages of PK50KL ORION, PK63KL ORION, PK73KL ORION, PK89KL ORION, PK102KL ORION, PK105KL ORION, PK114KL ORION perforating systems are the best penetration capability, high charge density and optimal phasing, low mining effect, ease of assembly, maximum exploitation safety during operation, fail-safe actuation and reliability.

During gun loading any type of perforating charge can be used, for example Deep Penetration and Super Deep Penetration Charges can be alternated with Big Hole Charges in the same gun, giving great flexibility for certain types of formations.

Perforator carrier has scallops that allow to make maximal use of perforating charge energy during creation of perforations in the formation.

In case of order, please, specify PK50KL ORION STO 57783950-001-2012.
In case of order, please, specify PK63KL ORION STO 57783950-001-2012.
In case of order, please, specify PK73KL ORION STO 57783950-001-2012.
In case of order, please, specify PK89KL ORION STO 57783950-001-2012.
In case of order, please, specify PK102KL ORION STO 57783950-001-2012.
In case of order, please, specify PK105KL ORION STO 57783950-013-2015.
In case of order, please, specify PK114KL ORION STO 57783950-001-2012.

# SPECIFICATION

*Critical parameters and specification of perforating systems*

## TABLE 1

| | Description | Specification | | | | | | |
|---|---|---|---|---|---|---|---|---|
| | | 50KL-2" | 63KL-2 1/2" | 73KL-2 7/8" | 89KL-3 1/2" | 102KL-4" | 114KL-4 1/2" | 105KL-4.13" |
| 1 | Min ID of casing/tubing, in | 2-3/8"[1]/2-3/4"[2] | 3-1/8" | 3-1/2" | 4-1/4" | 4-2/3" | 5-1/2" | 5-1/8" |
| 2 | Max allowed hydrostatic pressure, PSI | 20300 | 20300 | 20300 | 20300 | 20300 | 17400 | 11600 |
| 3 | Min allowed hydrostatic pressure, PSI | | | | | | | |
| | - wireline conveyed | 14,5 | | | | | | |
| | - tubing conveyed | 145-725[3] | | | | | | - |
| 4 | Perforator operation | | | | | | | |
| 5 | Maximum allowed Time (hrs) at Temperature (F) on depth for each Explosive Type[4], h: | | | | | | | |
| | - RDX | Max 24 hrs at 300 F | | | | | | |
| | | Max 48 hrs at 240 F | | | | | | |
| | | Max 72 hrs at 230 F | | | | | | |
| | - HMX | Max 24 hrs at 340 F | | | | | | |
| | | Max 48 hrs at 315 F | | | | | | |
| | | Max 72 hrs at 290 F | | | | | | |
| | - HNS | Max 24 hrs at 450 F | | | | | | |
| | | Max 48 hrs at 420 F | | | | | | |
| 6 | Maximum overall gun length in one run, ft: | | | | | | | |
| | - wireline conveyed, ft | Limited by cable hoisting load | | | | | | 6 |
| | - tubing conveyed, ft | | | | | | | |
| | (with Firing Head GS ORION-01) | - | Perforated zone | | | | | - |
| | (with Firing Head GS ORION-02) | - | Perforated zone | | | | | - |
| | (with Firing Head GS ORION-03-00) | Perforated zone | | | | | | - |
| | (with Firing Head GS ORION-03-01) | Perforated zone | | | | | | - |
| | (with Firing Head GS ORION-04) | - | Perforated zone | | | | | - |
| | (with Firing Head GS ORION-05) | - | Perforated zone | | | | | - |
| | - coil tubing conveyed | Limited by technical features of CT | | | | | | - |
| 7 | Max shot density, spf. | 6 | 6 | 6 | 6 | 6 | 6[7]/12[8] | 3 |
| 8 | Charge phasing, degree | 0-180 | | | | | | 60/90 |
| 9 | Unloaded gun weight in air, lbs. | | | | | | | |
| | Nominal PK gun length 3.3 ft | 19.84 | 26.5 | 36.4 | 51.4 | 61.7 | 72.7 | 97 |
| | 6.6 ft | 37.5 | 40.5 | 66.1 | 93 | 110.2 | 134.2 | 185.2 |
| | 10 ft | 52.9 | 68.3 | 95.9 | 136 | 152.1 | 189.6 | - |
| | 13 ft | 65 | 90.4 | 126.7 | 179 | 200.6 | 242.5 | - |
| | 16.4 ft | 81.6 | 110.2 | 155.4 | 222 | 247 | 299.8 | - |
| | 20 ft | 97 | 132.2 | 199.5 | 265 | 293.2 | 357.1 | - |
| | Weight of armed gun (with head and sub) at max shot density, lbs. | | | | | | | |
| | Nominal gun length PK 3.3 ft | 33 | 50.7 | 61.7 | 99.2 | 110.3 | 132.2 | 101.4 |
| | 6.6 ft | 50 | 79.4 | 99.2 | 150 | 158.7 | 196.2 | 198.4 |
| | 10 ft | 68.3 | 103.6 | 136.7 | 200.6 | 202.8 | 295.4 | - |
| | 13 ft | 73.8 | 134.5 | 176.4 | 249 | 258 | 370.4 | - |
| | 16.4 ft | 90.4 | 160.9 | 211.6 | 295.4 | 310.8 | 449.7 | - |
| | 20 ft | 105.8 | 187.4 | 264.5 | 341.7 | 363.8 | 529 | - |

*Note:*
1) On wireline;
2) On coil tubing;
3) Depending on Firing Head used;
4) Depending on type of explosive used in perforating charge. Time is also limited by max allowed temperature of other gun components, containing explosives (Firing Head, Firing Cartridge and detonating cord) and O-ring temperature resistance;
6) Only if min tube ID is 2-3/4";
7) When using ORION102 perforating charge;
8) When using ORION114 perforating charge.
Following limit deviations are allowed:
- Overall dimensions, ± 2%;
- weight, ± 3%.

## THE INNOVATION

Novelty and singularity of ORION perforator design is that each perforator carrier has max shot density of 20 shot/m plus one charge (10ft carrier has 61 shots, 20ft carrier has 121 shots, etc.).

Max shot density 6 spf might be reached by working with one perforating section fully loaded during one run. In case of using two or more sections max shot density decreases depending on the amount and length of perforator carriers. But taking into account the design features, shot density of ORION perforating sections is greater than those of other producers.

## SPECIFICATION

*Main technical features of ORION perforating charges are shown in Table 2.*

TABLE 2

| Perforating System | Charge Name | Charge Type | Charge Phasing, Degree | Explosive Weight, g | Shot Density, shot/spf |
|---|---|---|---|---|---|
| PK50KL ORION | ORION50-01 | BH | 0-180 | 7 | 6 |
| | ORION50-02 | SDP | | 7 | |
| | ORION50-03 | DP | | 7 | |
| PK63KL ORION | ORION63-01 | BH | 0-180 | 12 | 6 |
| | ORION63-02 | DP | | 12 | |
| PK63KL ORION (self-oriented) | ORION50-01 | BH | 0-180 | 7 | 6 |
| | ORION50-02 | SDP | | 7 | |
| | ORION50-03 | DP | | 7 | |
| PK73KL ORION | ORION73-01 | BH | 0-180 | 19 | 6 |
| | ORION73-02 | SDP | | 19 | |
| | ORION73-03 | DP | | 19 | |
| PK73KL ORION (self-oriented) | ORION63-01 | BH | 0-180 | 12 | 6 |
| | ORION63-02 | DP | | 12 | |
| PK89KL ORION | ORION89-01 | BH | 0-180 | 23 | 6 |
| | ORION89-02 | SDP | | 23 | |
| | ORION89-03 | DP | | 23 | |
| | ORION89-05 | OP | | 25 | |
| PK102KL ORION | ORION102-01 | BH | 0-180 | 30 | 6 |
| | ORION102-02 | SDP | | 31 | |
| | ORION102-03 | DP | | 31 | |
| | ORION102-04 | SDP | | 34 | 4.8 |
| | ORION102-05 | OP | | 34 | |
| PK114KL ORION | ORION102-01 | BH | 0-180 | 30 | 6 |
| | ORION102-02 | SDP | | 31 | |
| | ORION102-03 | DP | | 31 | |
| | ORION102-04 | SDP | | 34 | 5.5 |
| | ORION102-05 | OP | | 34 | |
| PK114KL ORION | ORION114-01 | BH | 0-135 | 19 | 12 |
| | ORION114-03 | DP | | 21 | |
| PK105KL ORION | ORION105-01 | BH | 60-90 | 23 | 3 |
| | ORION105-02 | DP | | 23 | |

| Charge Name | Entrance hole diameter according to design, in | Depth of penetration according to design, in | Entrance hole diameter according to design API 19B, in | Depth of penetration according to design API 19B, in |
|---|---|---|---|---|
| ORION50-01 | 0.55 | 4.33 | 0.5 | 4.96 |
| ORION50-02 | 0.24 | 20.08 | 0.22 | 20.39 |
| ORION50-03 | 0.32 | 16.93 | 0.24 | 19.17 |
| ORION63-01 | 0.67 | 5.91 | 0.59 | 6.97 |
| ORION63-02 | 0.35 | 25.19 | 0.33 | 29.05 |
| ORION50-01 | 0.55 | 4.33 | - | - |
| ORION50-02 | 0.24 | 20.08 | - | - |
| ORION50-03 | 0.31 | 16.93 | - | - |
| ORION73-01 | 0.77 | 7.09 | 0.71 | 7.20 |
| ORION73-02 | 0.35 | 29.53 | 0.32 | 39.01 |
| ORION73-03 | 0.39 | 14.17 | 0.32 | 24.09 |
| ORION63-01 | 0.67 | 5.9 | - | - |
| ORION63-02 | 0.39 | 25.2 | - | - |
| ORION89-01 | 0.91 | 8.66 | 0.79 | 8.21 |
| ORION89-02 | 0.45 | 41.34 | 0.42 | 41.02 |
| ORION89-03 | 0.47 | 33.46 | 0.4 | 35.99 |
| ORION89-05 | 0.63 | 25.19 | 0.64 | 27.71 |
| ORION102-01 | 0.95 | 8.66 | 0.87 | 8.86 |
| ORION102-02 | 0.39 | 47.24 | 0.43 | 45.83 |
| ORION102-03 | 0.43 | 39.37 | 0.45 | 44.53 |
| ORION102-04 | 0.45 | 52.36 | 0.45 | 48.38 |
| ORION102-05 | 0.63 | 47.24 | 0.61 | 52.95 |
| ORION102-01 | 0.95 | 8.66 | 0.75 | 7.79 |
| ORION102-02 | 0.39 | 47.24 | 0.41 | 45.24 |
| ORION102-03 | 0.43 | 39.37 | - | - |
| ORION102-04 | 0.45 | 52.36 | 0.44 | 61.22 |
| ORION102-05 | 0.63 | 47.24 | 0.53 | 50.03 |
| ORION114-01 | 0.79 | 7.09 | 0.72 | 6.93 |
| ORION114-03 | 0.47 | 29.53 | 0.39 | 30.79 |
| ORION105-01 | 0.98 | 8.27 | - | - |
| ORION105-02 | 0.47 | 35.43 | - | - |

# WIRELINE CONVEYED PERFORATING SYSTEM BLASTING CARTRIDGE ON THE TOP (SEPARATE HEAD ASSEMBLY)

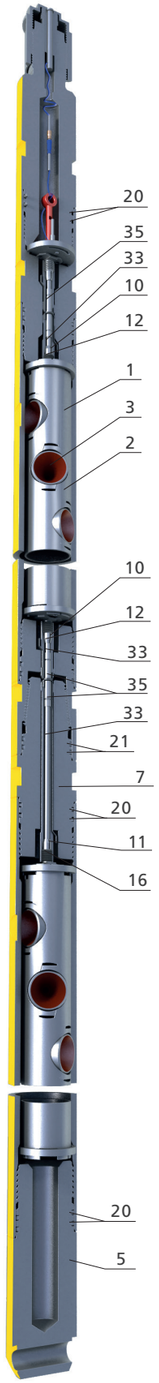


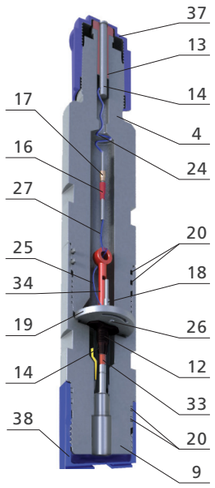


| Item | Description | Details as per |
|---|---|---|
| 1 | Charge tube assy | Table 3 |
| 2 | Carrier | Table 3 |
| 3 | Perforating charge | Table 3 |
| 4 | Head | Table 3 |
| 5 | End sub | Table 3 |
| 7 | Conical sub[1)] | Table 3 |
| 9 | Universal sub | Table 3 |
| 10 | Booster plug assy (60mm) | Table 3 |
| 11 | Booster plug assy (184 mm) | Table 3 |
| 12 | Isolator | Table 3 |
| 13 | Electrical connector | Table 3 |
| 14 | Electrical connector core | Table 3 |
| 16 | Insulated plug-in connector | Table 3 |
| 17 | Insulated plug-in connector | Table 3 |
| 18 | Ring plug | Table 3 |
| 19 | Bottom plug (charge tube) | Table 3 |
| 20 | O-ring GOST 18829-73/9833-73 | Table 3 |
| 21 | O-ring GOST 18829-73/9833-73 | Table 3 |
| 24 | Cord [2)] | Table 3 |
| 25 | Cord PEV-2-0,56 | Table 3 |
| 26 | Screw M4x8 | Table 3 |
| 27 | Heat shrink tube | Table 3 |
| 33 | Detonating Cord | Table 3 |
| 34 | Blasting cartridge | Table 3 |
| 35 | Booster | Table 3 |
| 37 | Protecting cap (for the perforating head) | VGS89-01.020 |
| 38 | Protecting cap | |

*1) Perforating gun can be assembled with conical sub VGS...-01.004 (trapezoidal thread)*

*2) Optional. Perforating system can be equipped by:*
*1. Cord P-274M, Mark TU 16-505.221-78*
*2. Cord PRKA 1x0,75, Mark TU 16-505.317-76*



# WIRELINE CONVEYED PERFORATING SYSTEM BLASTING CARTRIDGE ON THE TOP

| Item | Description | Details as per |
|---|---|---|
| 1 | Charge tube assy | Table 3 |
| 2 | Carrier | Table 3 |
| 3 | Perforating charge | Table 3 |
| 4 | Head | Table 3 |
| 5 | End sub | Table 3 |
| 7 | Conical sub[1)] | Table 3 |
| 10 | Booster plug assy (60mm) | Table 3 |
| 11 | Booster plug assy (184 mm) | Table 3 |
| 12 | Isolator | Table 3 |
| 13 | Electrical connector | Table 3 |
| 14 | Electrical connector core | Table 3 |
| 16 | Insulated plug-in connector | Table 3 |
| 17 | Insulated plug-in connector | Table 3 |
| 18 | Ring plug | Table 3 |
| 20 | O-ring GOST 18829-73/9833-73 | Table 3 |
| 21 | O-ring GOST 18829-73/9833-73 | Table 3 |
| 24 | Cord [2)] | Table 3 |
| 25 | Cord PEV-2-0,56 | Table 3 |
| 26 | Screw M4x8 | Table 3 |
| 27 | Heat shrink tube | Table 3 |
| 33 | Detonating Cord | Table 3 |
| 34 | Blasting cartridge | Table 3 |
| 35 | Booster | Table 3 |
| 37 | Protecting cap (for the perforating head) | VGS89-01.020 |

*1) Perforating gun can be assembled with conical sub VGS...-01.004 (trapezoidal thread)*

*2) Optional. Perforating system can be equipped by:*
*1. Cord P-274M, Mark TU 16-505.221-78*
*2. Cord PRKA 1x0,75, Mark TU 16-505.317-76*

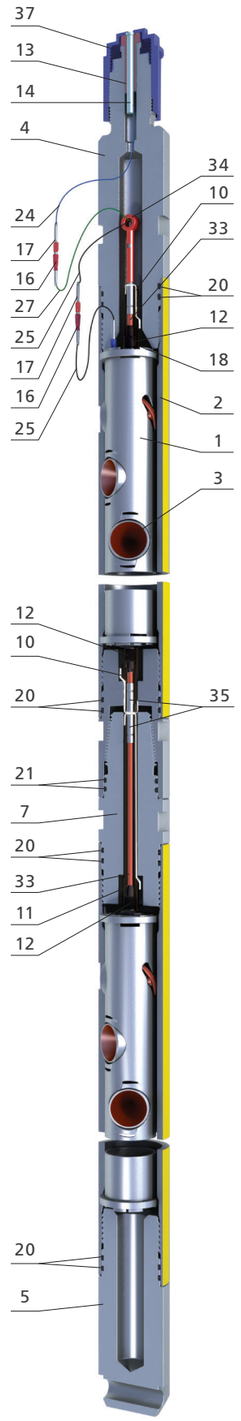

# WIRELINE CONVEYED PERFORATING SYSTEM BLASTING CARTRIDGE ON THE BOTTOM (SEPARATE END SUB ASSEMBLY)

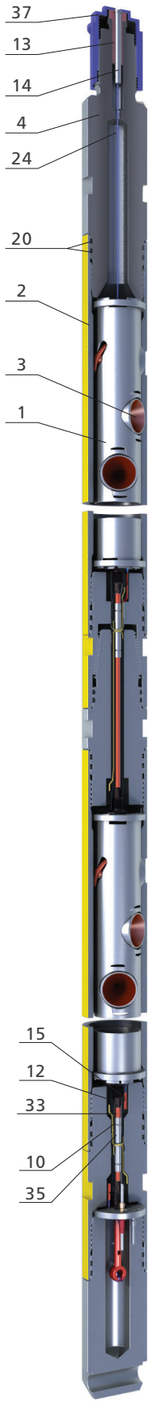


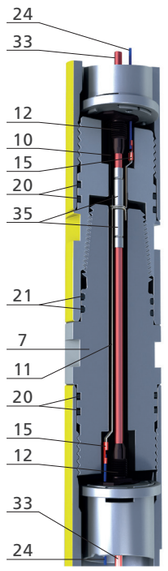


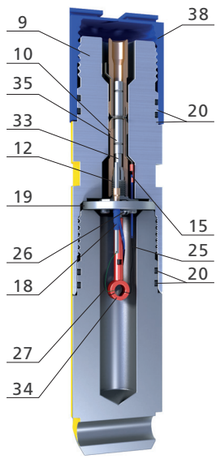


| Item | Description | Details as per |
|---|---|---|
| 1 | Charge tube assy | Table 3 |
| 2 | Carrier | Table 3 |
| 3 | Perforating charge | Table 3 |
| 4 | Head | Table 3 |
| 5 | End sub | Table 3 |
| 7 | Conical sub [1)] | Table 3 |
| 9 | Universal sub | Table 3 |
| 10 | Booster plug assy (60 mm) | Table 3 |
| 11 | Booster plug assy (184 mm) | Table 3 |
| 12 | Isolator | Table 3 |
| 13 | Electrical connector | Table 3 |
| 14 | Electrical connector core | Table 3 |
| 15 | Insulated flat connector | Table 3 |
| 18 | Ring plug | Table 3 |
| 19 | Bottom plug (charge tube) | Table 3 |
| 20 | O-ring GOST 18829-73/9833-73 | Table 3 |
| 21 | O-ring GOST 18829-73/9833-73 | Table 3 |
| 24 | Cord [2)] | Table 3 |
| 25 | Cord PEV -2-0,56 | Table 3 |
| 26 | Screw M4x8 | Table 3 |
| 27 | Heat shrink tube | Table 3 |
| 33 | Detonating cord | Table 3 |
| 34 | Blasting cartridge | Table 3 |
| 35 | Booster | Table 3 |
| 37 | Protecting cap (for the perforating head) | VGS89-01.020 |
| 38 | Protecting cap | |

*1) Perforating gun can be assembled with conical sub VGS...-01.004 (trapezoidal thread)*

*2) Optional. Perforating system can be equipped by:*
*1. Cord P-274M, Mark TU 16-505.221-78*
*2. Cord PRKA 1x0,75, Mark TU 16-505.317-76*



# WIRELINE CONVEYED PERFORATING SYSTEM BLASTING CARTRIDGE ON THE BOTTOM

| Item | Description | Details as per |
|---|---|---|
| 1 | Charge tube assy | Table 3 |
| 2 | Carrier | Table 3 |
| 3 | Perforating charge | Table 3 |
| 4 | Head | Table 3 |
| 5 | End sub | Table 3 |
| 7 | Conical sub [1)] | Table 3 |
| 10 | Booster plug assy (60 mm) | Table 3 |
| 11 | Booster plug assy (184 mm) | Table 3 |
| 12 | Isolator | Table 3 |
| 13 | Electrical connector | Table 3 |
| 14 | Electrical connector core | Table 3 |
| 15 | Insulated flat connector | Table 3 |
| 16 | Insulated plug-in connector | Table 3 |
| 17 | Insulated plug-in connector | Table 3 |
| 18 | Ring plug | Table 3 |
| 20 | O-ring GOST 18829-73/9833-73 | Table 3 |
| 21 | O-ring GOST 18829-73/9833-73 | Table 3 |
| 24 | Cord [2)] | Table 3 |
| 25 | Cord PEV -2-0,56 | Table 3 |
| 26 | Screw M4x8 | Table 3 |
| 27 | Heat shrink tube | Table 3 |
| 33 | Detonating cord | Table 3 |
| 34 | Blasting cartridge | Table 3 |
| 35 | Booster | Table 3 |
| 37 | Protecting cap (for the perforating head) | VGS89-01.020 |

*1) Perforating gun can be assembled with conical sub VGS...-01.004 (trapezoidal thread)*

*2) Optional. Perforating system can be equipped by:*
*1. Cord P-274M, Mark TU 16-505.221-78*
*2. Cord PRKA 1x0,75, Mark TU 16-505.317-76*

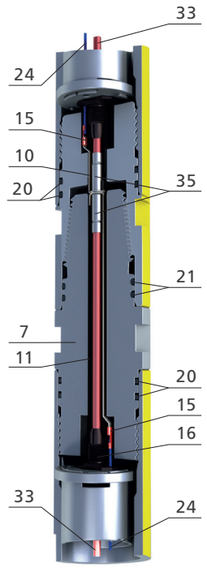


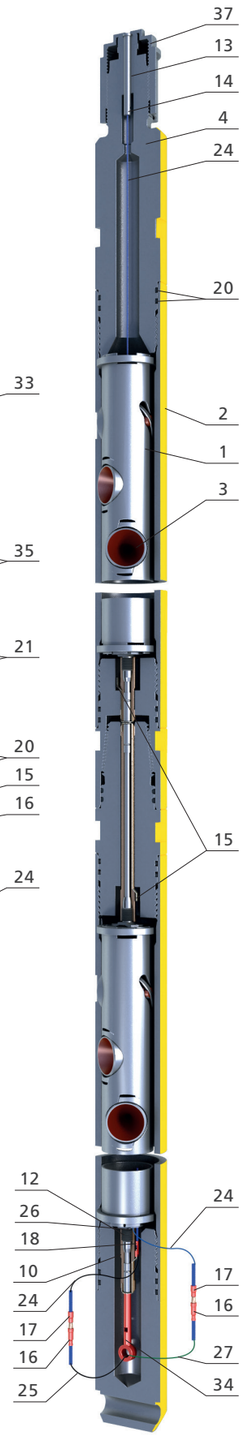

# WIRELINE CONVEYED PERFORATING SYSTEM BLASTING CARTRIDGE ON THE TOP WITH RUBICON® SEPARATE PERFORATING HEAD

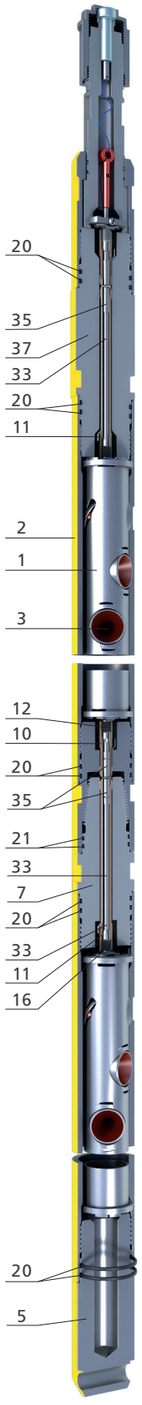


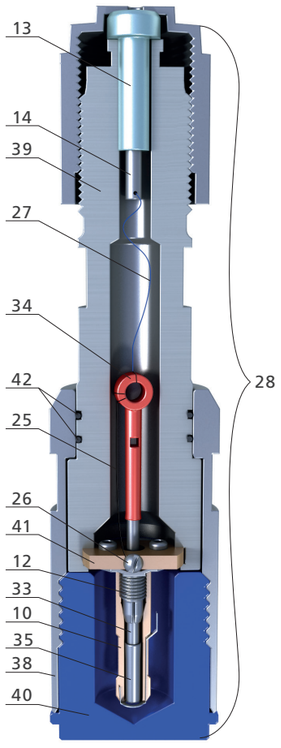


| Item | Description | Details as per |
|---|---|---|
| 1 | Charge tube assy | Table 3 |
| 2 | Carrier | Table 3 |
| 3 | Perforating charge | Table 3 |
| 5 | End sub | Table 3 |
| 7 | Conical sub [1)] | Table 3 |
| 10 | Booster plug (60 mm) | Table 3 |
| 11 | Booster plug (184 mm) | Table 3 |
| 12 | Isolator | Table 3 |
| 13 | Electrical connector | Table 3 |
| 14 | Electrical connector core | Table 3 |
| 20 | O-ring GOST 18829-73/9833-73 | Table 3 |
| 21 | O-ring GOST 18829-73/9833-73 | Table 3 |
| 25 | Cord PEV-2-0,56 [2)] | Table 3 |
| 26 | Screw M4x8 | Table 3 |
| 27 | Heat shrink tube | Table 3 |
| 28 | Separate Perforating Head assy | Table 3 |
| 33 | Detonating cord | Table 3 |
| 34 | Blasting cartridge | Table 3 |
| 35 | Booster | Table 3 |
| 37 | Cylindrical sub for PK73KL ORION | VGS-73-01.004 |
| | Top sub for PK89KL ORION | VGS-89-01.011-04 |
| | Top sub for PK102KL ORION | VGS-102-01.011-04 |
| 38 | Cup | VGS73-20.001 |
| 39 | Head | VGS73-20.002 |
| 40 | End plug | VGS73-20.003 |
| 41 | Plug | VGS73-20.004 |
| 42 | O-ring GOST 18829-73/9833-73 | 044-050-36-2-6 |
| 43 | O-ring GOST 18829-73/9833-73 | 060-066-36-2-6 |

*1) Perforating gun can be assembled with conical sub VGS...-01.004 (trapezoidal thread)*



# TUBING CONVEYED PERFORATING SYSTEM

| Item | Description | Details as per |
|---|---|---|
| 1 | Charge tube assy | Table 3 |
| 2 | Carrier | Table 3 |
| 3 | Perforating charge | Table 3 |
| 5 | End sub | Table 3 |
| 7 | Conical sub [1)] | Table 3 |
| 8 | Top sub | Table 3 |
| 10 | Booster plug (60 mm) | Table 3 |
| 11 | Booster plug (184 mm) | Table 3 |
| 12 | Isolator | Table 3 |
| 20 | O-ring GOST 18829-73/9833-73 | Table 3 |
| 21 | O-ring GOST 18829-73/9833-73 | Table 3 |
| 33 | Detonating cord | Table 3 |
| 35 | Booster | Table 3 |
| 37 | Protecting cap (for top sub) | |

*1) Perforating gun can be assembled with cylindrical sub VGS...-01.004 (trapezoidal thread)*

*Picture 1 – PK for the use with the following Firing Heads GS «ORION-01», GS «ORION-02», GS «ORION-03», GS «ORION-04» and GS «ORION-05».*

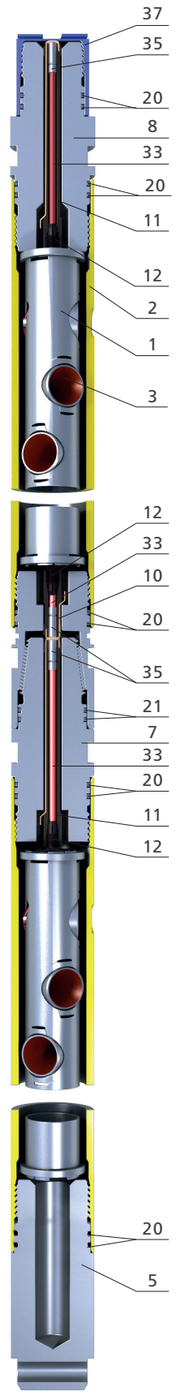


*Picture 1*

# PK50KL ORION WIRELINE CONVEYED PERFORATING SYSTEM

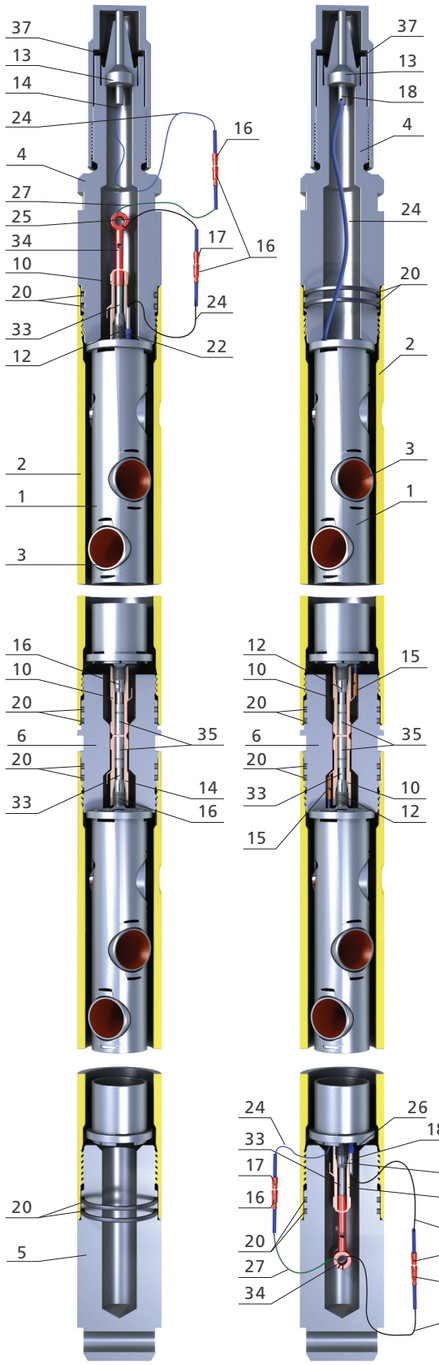


Picture 1

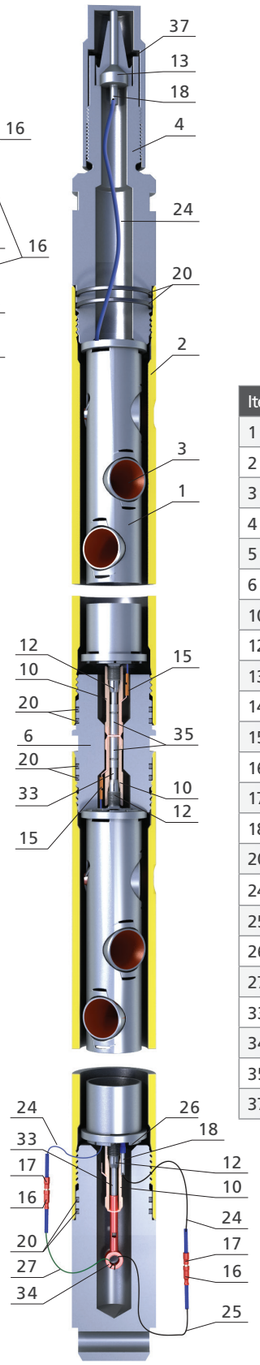


Picture 2

| Item | Description | Details as per |
|---|---|---|
| 1 | Charge tube assy | Table 3 |
| 2 | Carrier | Table 3 |
| 3 | Perforating charge | Table 3 |
| 4 | Head | Table 3 |
| 5 | End sub | Table 3 |
| 6 | Cylindrical sub | Table 3 |
| 10 | Booster plug assy (60mm) | Table 3 |
| 12 | Isolator | Table 3 |
| 13 | Electrical connector | Table 3 |
| 14 | Electrical connector core | Table 3 |
| 15 | Insulated flat connector | Table 3 |
| 16 | Insulated plug-in connector | Table 3 |
| 17 | Insulated plug-in connector | Table 3 |
| 18 | Ring plug | Table 3 |
| 20 | O-ring GOST 18829-73/9833-73 | Table 3 |
| 24 | Cord [2)] | Table 3 |
| 25 | Cord PEV-2-0,56 | Table 3 |
| 26 | Screw M4x8 | Table 3 |
| 27 | Heat shrink tube | Table 3 |
| 33 | Detonating cord | Table 3 |
| 34 | Blasting cartridge | Table 3 |
| 35 | Booster | Table 3 |
| 37 | Protecting head (for head) | |

*Picture 1 - PK with blasting cartridge on the top.*
*Picture 2 - PK with blasting cartridge on the bottom.*

*2) Optional. PK can be equipped by:*
*1. Cord P-274M, mark TU 16-505.221-78*
*2. Cord PRKA 1x0,75, mark TU 16-505.317-76*



# PK50KL ORION COIL TUBING CONVEYED PERFORATING SYSTEM WITH CABLE GLAND

| Item | Description | Details as per |
|---|---|---|
| 1 | Charge tube assy | Table 3 |
| 2 | Carrier | Table 3 |
| 3 | Perforating charge | Table 3 |
| 5 | End sub | Table 3 |
| 6 | Cylindrical sub | Table 3 |
| 10 | Booster plug assy (60mm) | Table 3 |
| 12 | Isolator | Table 3 |
| 15 | Insulated flat connector | Table 3 |
| 16 | Insulated plug-in connector | Table 3 |
| 17 | Insulated plug-in connector | Table 3 |
| 18 | Ring plug | Table 3 |
| 20 | O-ring GOST 18829-73/9833-73 | Table 3 |
| 22 | O-ring GOST 18829-73/9833-73 | Table 3 |
| 24 | Cord [2)] | Table 3 |
| 25 | Cord PEV-2-0,56 | Table 3 |
| 26 | Screw M4x8 | Table 3 |
| 27 | Heat shrink tube | Table 3 |
| 33 | Detonating cord | Table 3 |
| 34 | Blasting cartridge | Table 3 |
| 35 | Booster | Table 3 |
| 37 | Protecting cap (for head) | VGS50-01.015 |
| 38 | Head | VGS50-01.002-01 |
| 39 | Electrical connector | VGS50-10.000 |

*Picture 1 - PK with blasting cartridge on the top.*
*Picture 2 - PK with blasting cartridge on the bottom.*

*2) Optional. PK can be equipped by:*
*1. Cord P-274M, mark TU 16-505.221-78*
*2. Cord PRKA 1x0,75, mark TU 16-505.317-76*

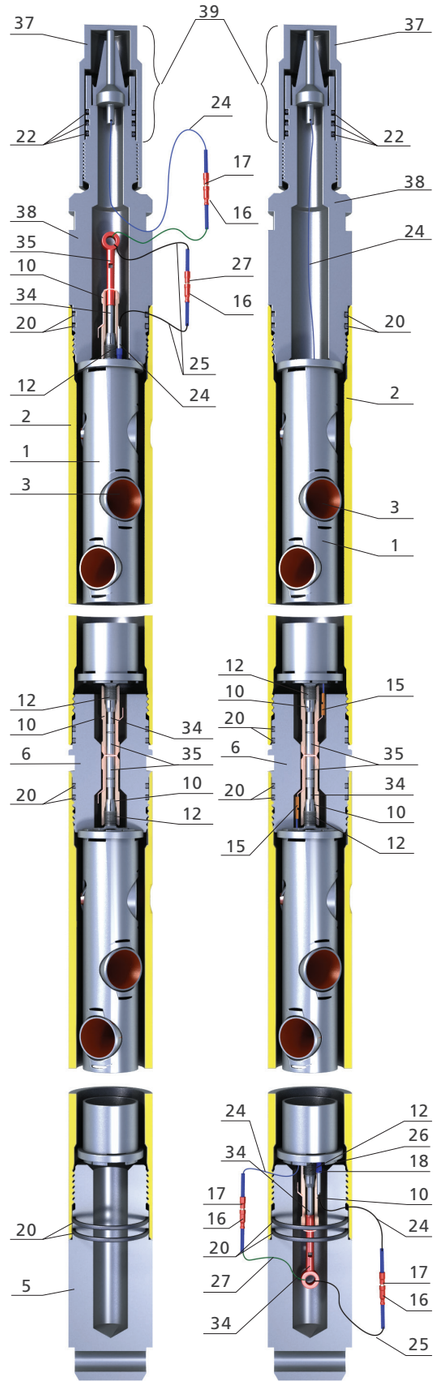


Picture 1

Picture 2

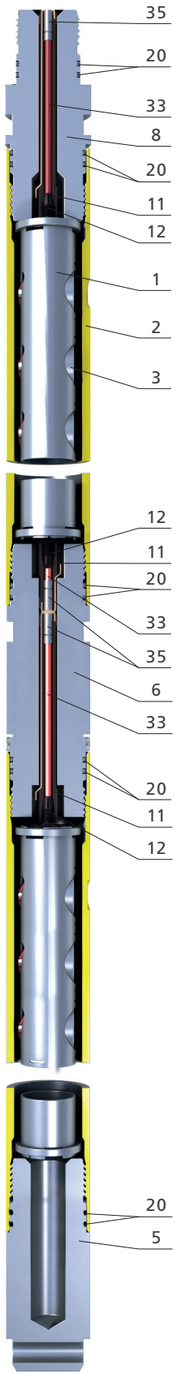


Picture 1

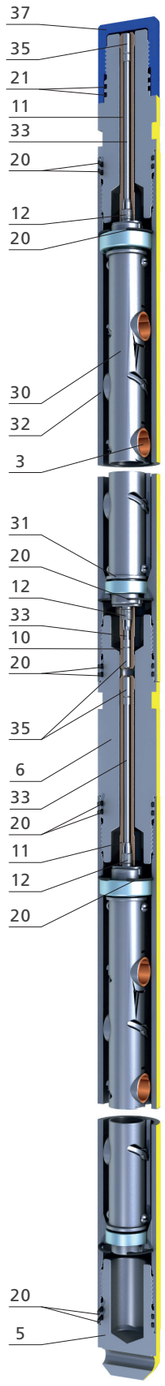


Picture 2

# ORIENTED PERFORATION

| Item | Description | Details as per |
|---|---|---|
| 1 | Charge tube assy | Table 3 |
| 2 | Carrier | Table 3 |
| 3 | Perforating charge | Table 3 |
| 5 | End sub | Table 3 |
| 6 | Cylindrical sub | Table 3 |
| 8 | Top sub | Table 3 |
| 10 | Booster plug assy (60 mm) | Table 3 |
| 11 | Booster plug assy (184mm) | Table 3 |
| 12 | Isolator | Table 3 |
| 20 | O-ring GOST 18829-73/9833-73 | Table 3 |
| 21 | O-ring GOST 18829-73/9833-73 | Table 3 |
| 29 | Lock ring | Table 3 |
| 30 | Ready-assembled charge tube | Table 3 |
| 31 | Socket sleeve | Table 3 |
| 32 | Carrier | Table 3 |
| 33 | Detonating cord | Table 3 |
| 35 | Booster | Table 3 |
| 37 | Protecting head (for head) | |
| 38 | Head | |

*It is used in PK63KL ORION, PK73KL ORION, PK89KL ORION, PK102KL ORION, PK114KL ORION.*

*Picture 1 – PK oriented by adjusting nuts*
*Picture 2 – PK self-oriented*

# PK105KL ORION CABLE CONVEYED REUSABLE PERFORATING SYSTEM

| Item | Description | Part # |
|---|---|---|
| 1 | Carrier | VGS105-02.001 90⁰<br>VGS105-02.001-01 60⁰ |
| 2 | Head | VGS105-02.002 |
| 3 | End sub | VGS105-02.003 |
| 4 | Electrical connector | VGS89-01.015 |
| 5 | Electrical connector core | VGS89-01.015-01 |
| 6 | Safety cap | VGS105-01.021 |
| 7 | Disk | VGS105-01.022 |
| 8 | Cartridge plug | VGS105-01.023-01 |
| 9 | Pressure plug | VGS105-02.004 |
| 10 | O-ring V70 GOST 13943-86 | |
| 11 | O-ring 086-092-36-206 GOST 18829-73 | |
| 12 | Protecting cap (M48x3) | VGS89-01.020 |
| 13 | Temporary cover | PK 105-KL-20.00.011 |
| 14 | ORION105 Perforating charge for PK 105 reusable | ORION 105-01<br>ORION 105-02 |
| 15 | Cartridge PVPD-N | |
| 16 | Detonating cord DShT 200 | |
| 20 | Cord P-274M TU 16-505.221-78 | |
| 22 | Cord PEV-2-0,56 GOST 7262-78 | |
| 23 | Heat shrink tube F2 | |
| 24 | RshIp 1,5-4 red | |
| 25 | RshIm 1,5-4 red | |

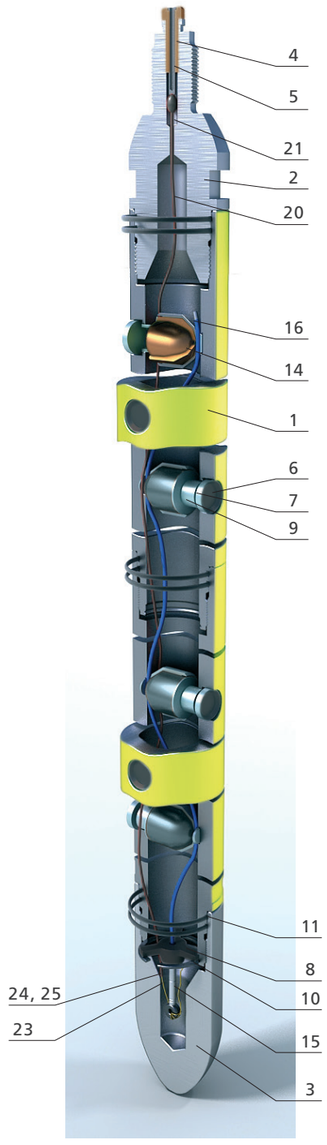

# PERFORATOR COMPONENTS

## TABLE 3

| Item | Description | PK50KL ORION | | | PK63KL ORION | |
|---|---|---|---|---|---|---|
| | | D x L x S – D-cross dimensions; L -length; S –width across flat (thread), in | | Part # | D x L x S – D-cross dimensions; L -length; S –width across flat (thread), in | Part # |
| 1 | Charge tube | 39" | 1 1/2"x43.07 | VGS50-03.100-07 | 2"x43.3 | VGS63-01.100-01 |
| | | 79" | 1 1/2"x82.44 | VGS50-03.100-08 | 2"x82.68 | VGS63-01.100-02 |
| | | 118" | 1 1/2"x121.81 | VGS50-03.100-09 | 2"x122.04 | VGS63-01.100-03 |
| | | 157" | 1 1/2"x161.18 | VGS50-04.100-04 | 2"x161.40 | VGS63-01.100-04 |
| | | 197" | 1 1/2"x198.78 | VGS50-04.100-05 | 2"x200.79 | VGS63-01.100-05 |
| | | 236" | 1 1/2"x238.15 | VGS50-04.100-06 | 2"x240.16 | VGS63-01.100-06 |
| 2 | Carrier | 39" | 2"x46.85 | VGS50-03.001-07 | 2 1/2"x48.42 | VGS63-01.001-01 |
| | 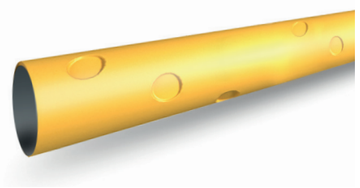 | 79" | 2"x86.22 | VGS50-03.001-08 | 2 1/2"x87.80 | VGS63-01.001-02 |
| | | 118" | 2"x122.04 | VGS50-03.001-09 | 2 1/2"x127.16 | VGS63-01.001-03 |
| | | 157" | 2"x161.40 | VGS50-04.001-04 | 2 1/2"x166.54 | VGS63-01.001-04 |
| | | 197" | 2"x200.79 | VGS50-04.001-05 | 2 1/2"x205.90 | VGS63-01.001-05 |
| | | 236" | 2"x240.16 | VGS50-04.001-06 | 2 1/2"x245.27 | VGS73-01.001-06 |
| 3 | Perforating charge | 1.14x1.24 | | ORION50-01 | 1 1/2"x1.67 | ORION63-01 |
| | 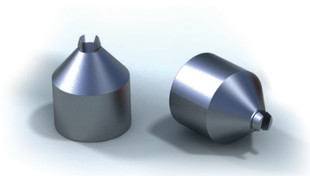 | 1.14x1.24 | | ORION50-02 | 1 1/2"x1.67 | ORION63-02 |
| | | 1.14x1.24 | | ORION50-03 | | |
| | | | | | | |
| 4 | Perforating head | 2"x7.87x1.61 | | VGS50-03.002 | 2 1/2"x10.24x2.17 | VGS63-01.002 |
| | | | | | | |

| PK73KL ORION | | PK89KL ORION | | PK102KL ORION | | PK114KL ORION | |
|---|---|---|---|---|---|---|---|
| D x L x S – D-cross dimensions; L -length; S –width across flat (thread), in | Part # | D x L x S – D-cross dimensions; L -length; S –width across flat (thread), in | Part # | D x L x S – D-cross dimensions; L -length; S –width across flat (thread), in | Part # | D x L x S – D-cross dimensions; L -length; S –width across flat (thread), in | Part # |
| 2 7/16"x44.09 | VGS73-01.100-01 | 2 7/8"x44.09 | VGS89-01.100-01 | 3 1/2"x44.09 | VGS102-01.100-01 | 3 5/8"x44.09 | VGS114-01.100-01 |
| 2 7/16"x83.46 | VGS73-01.100-02 | 2 7/8"x83.46 | VGS89-01.100-02 | 3 1/2"x83.46 | VGS102-01.100-02 | 3 5/8"x83.46 | VGS114-01.100-02 |
| 2 7/16"x122.83 | VGS73-01.100-03 | 2 7/8"x122.83 | VGS89-01.100-03 | 3 1/2"x122.83 | VGS102-01.100-03 | 3 5/8"x122.83 | VGS114-01.100-03 |
| 2 7/16"x162.20 | VGS73-01.100-04 | 2 7/8"x162.20 | VGS89-01.100-04 | 3 1/2"x162.20 | VGS102-01.100-04 | 3 5/8"x162.20 | VGS114-01.100-04 |
| 2 7/16"x201.57 | VGS73-01.100-05 | 2 7/8"x201.57 | VGS89-01.100-05 | 3 1/2"x201.57 | VGS102-01.100-05 | 3 5/8"x201.57 | VGS114-01.100-05 |
| 2 7/16"x240.94 | VGS73-01.100-06 | 2 7/8"x240.94 | VGS89-01.100-06 | 3 1/2"x240.94 | VGS102-01.100-06 | 3 5/8"x240.94 | VGS114-01.100-06 |
| 2 7/8"x49.21 | VGS73-01.001-01 | 3 1/2"x49.21 | VGS89-01.001-01 | 4"x49.21 | VGS102-01.001-01 | 4 1/2"x49.21 | VGS114-01.001-01 |
| 2 7/8"x88.58 | VGS73-01.001-02 | 3 1/2"x88.58 | VGS89-01.001-02 | 4"x88.58 | VGS102-01.001-02 | 4 1/2"x88.58 | VGS114-01.001-02 |
| 2 7/8"x127.95 | VGS73-01.001-03 | 3 1/2"x127.95 | VGS89-01.001-03 | 4"x127.95 | VGS102-01.001-03 | 4 1/2"x127.95 | VGS114-01.001-03 |
| 2 7/8"x167.32 | VGS73-01.001-04 | 3 1/2"x167.32 | VGS89-01.001-04 | 4"x167.32 | VGS102-01.001-04 | 4 1/2"x167.32 | VGS114-01.001-04 |
| 2 7/8"x206.69 | VGS73-01.001-05 | 3 1/2"x206.69 | VGS89-01.001-05 | 4"x206.69 | VGS102-01.001-05 | 4 1/2"x206.69 | VGS114-01.001-05 |
| 2 7/8"x246.06 | VGS73-01.001-06 | 3 1/2"x246.06 | VGS89-01.001-06 | 4"x246.06 | VGS102-01.001-06 | 4 1/2"x246.06 | VGS114-01.001-06 |
| 1 1/2"x1.89 | ORION73-01 | 1 5/8"x2.09 | ORION89-01 | 1 7/8"x2.24 | ORION102-01 | 1 7/8"x2.24 | ORION102-01 |
| 1 1/2"x1.89 | ORION73-02 | 1 5/8"x2.09 | ORION89-02 | 1 7/8"x2.24 | ORION102-02 | 1 7/8"x2.24 | ORION102-02 |
| 1 1/2"x1.89 | ORION73-03 | 1 5/8"x2.09 | ORION89-03 | 1 7/8"x2.24 | ORION102-03 | 1 7/8"x2.24 | ORION102-03 |
| | | | | | ORION102-04 | | ORION114-01 |
| | | | | | | | ORION114-01 |
| 2 7/8"x10.43x2.04 | VGS73-01.002 | 3 1/2"x10.43x2.95 | VGS89-01.002 | 4"x10.43x3.35 | VGS102-01.002 | 4 1/2"x10.43x3.74 | VGS114-01.002 |

# PERFORATOR COMPONENTS

## TABLE 3 *(cont.)*

| Item | Description | PK50KL ORION | | PK63KL ORION | | PK73KL ORION | | PK89KL ORION | | PK102KL ORION | | PK114KL ORION | |
|---|---|---|---|---|---|---|---|---|---|---|---|---|---|
| | | D x L x S –D-cross dimensions; L -length; S –width across flat (thread), in | Part # | D x L x S –D-cross dimensions; L -length; S –width across flat (thread), in | Part # | D x L x S –D-cross dimensions; L -length; S –width across flat (thread), in | Part # | D x L x S –D-cross dimensions; L -length; S –width across flat (thread), in | Part # | D x L x S –D-cross dimensions; L -length; S –width across flat (thread), in | Part # | D x L x S –D-cross dimensions; L -length; S –width across flat (thread), in | Part # |
| 5 | Perforating sub | 2"x7.09x1.61 | VGS50-03.003 | 2 1/2"x8.46x2.17 | VGS63-01.003 | 2 7/8"x9.05x2.44 | VGS73-01.003 | 3 1/2"x9.05x2.95 | VGS89-01.003 | 4"x9.05x3.35 | VGS102-01.003 | 4 1/2"x9.05x3.74 | VGS114-01.003 |
| 6 | Cylindrical sub | 2"x4.61x1.61 | VGS50-03.004 | 2 1/2"x9.45x2.17 | VGS63-01.004 | 2 7/8"x9.45x2.44 | VGS73-01.004 | 3 1/2"x9.45x2.95 | VGS89-01.004 | 4"x9.45x3.35 | VGS102-01.004 | 4 1/2"x9.45x3.74 | VGS114-01.004 |
| 7 | Conical sub | - | - | - | - | 2 7/8"x9.45x2.44 | VGS73-80.000 | 3 1/2"x9.45x2.95 | VGS89-80.000 | 4"x9.45x3.35 | VGS102-80.000 | 4 1/2"x9.45x3.74 | VGS114-80.000 |
| 8 | Top sub | 2"x7.09x1.61 | VGS 50-03.011-01 | 2 1/2"x8.46x2.17 | VGS63-01.011-03 | 2 7/8"x7.16x2.44 | VGS73-01.011-03 | 3 1/2"x7.16x2.95 | VGS89-01.011-03 | 4"x7.16x3.35 | VGS102-01.011-03 | 4 1/2"x7.16x3.74 | VGS114-01.011-03 |

# PERFORATOR COMPONENTS

## TABLE 3 *(cont.)*

| Item | Description | PK50KL ORION | | PK63KL ORION | | PK73KL ORION | | PK89KL ORION | | PK102KL ORION | | PK114KL ORION | |
|---|---|---|---|---|---|---|---|---|---|---|---|---|---|
| | | D x L x S –D-cross dimensions; L -length; S –width across flat (thread), in | Part # | D x L x S –D-cross dimensions; L -length; S –width across flat (thread), in | Part # | D x L x S –D-cross dimensions; L -length; S –width across flat (thread), in | Part # | D x L x S –D-cross dimensions; L -length; S –width across flat (thread), in | Part # | D x L x S –D-cross dimensions; L -length; S –width across flat (thread), in | Part # | D x L x S –D-cross dimensions; L -length; S –width across flat (thread), in | Part # |
| 9 | Universal sub | - | - | 2 1/2"x7.52x2.16 | VGS63-01.007 | 2 7/8"x7.56x2.44 | VGS73-01.007 | 3 1/2"x9.05x2.95 | VGS89-01.007 | 4"x9.05x3.35 | VGS102-01.007 | 4 1/2"x9.05x3.74 | VGS114-01.007 |
| 10 | Booster plug | 5/8"x2.36 | VGS73-10.009 | 5/8"x2.36 | VGS73-10.009 | 5/8"x2.36 | VGS73-10.009 | 5/8"x2.36 | VGS73-10.009 | 5/8"x2.36 | VGS73-10.009 | 5/8"x2.36 | VGS73-10.009 |
| 11 | Booster plug 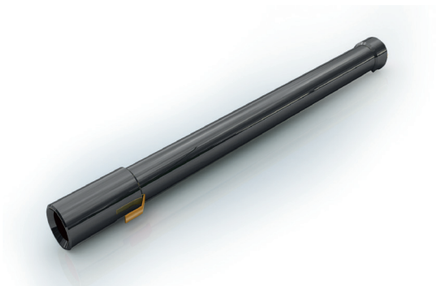 | - | - | 5/8"x7.24 | VGS73-10.009-01 | 5/8"x7.24 | VGS73-10.009-01 | 5/8"x7.24 | VGS73-10.009-01 | 5/8"x7.24 | VGS73-10.009-01 | 5/8"x7.24 | VGS73-10.009-01 |

# PERFORATOR COMPONENTS

## TABLE 3 *(cont.)*

| Item | Description | PK50KL ORION | | PK63KL ORION | | PK73KL ORION | | PK89KL ORION | | PK102KL ORION | | PK114KL ORION | |
|---|---|---|---|---|---|---|---|---|---|---|---|---|---|
| | | D x L x S –D-cross dimensions; L -length; S –width across flat (thread), in | Part # | D x L x S –D-cross dimensions; L -length; S –width across flat (thread), in | Part # | D x L x S –D-cross dimensions; L -length; S –width across flat (thread), in | Part # | D x L x S –D-cross dimensions; L -length; S –width across flat (thread), in | Part # | D x L x S –D-cross dimensions; L -length; S –width across flat (thread), in | Part # | D x L x S –D-cross dimensions; L -length; S –width across flat (thread), in | Part # |
| 12 | Isolator | 1.18x0.7x1.33 | VGS73-02.014 | 1.18x0.7x1.33 | VGS73-02.014 | 1.18x0.7x1.33 | VGS73-02.014 | 1.18x0.7x1.33 | VGS73-02.014 | 1.18x0.7x1.33 | VGS73-02.014 | 1.18x0.7x1.33 | VGS73-02.014 |
| 13 | Electrical connector | - | - | 7/8"x2.16 | VGS89-01.015 | 7/8"x2.16 | VGS89-01.015 | 7/8"x2.16 | VGS89-01.015 | 7/8"x2.16 | BVGS89-01.015 | 7/8"x2.16 | VGS89-01.015 |
| 14 | Electrical connector core | - | - | 3/8"x3 | VGS89-01.015-01 | 3/8"x3 | VGS89-01.015-01 | 3/8"x3 | VGS89-01.015-01 | 3/8"x3 | VGS89-01.015-01 | 3/8"x3 | VGS89-01.015-01 |
| 15 | Red insulated flat connector 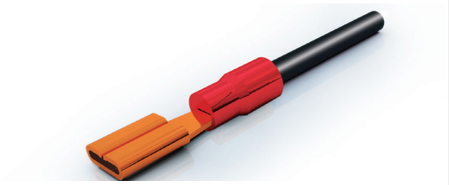 | | Rplm 1,5-3-0,8 | | Rplm 1,5-3-0,8 | | Rplm 1,5-3-0,8 | | Rplm 1,5-3-0,8 | | Rplm 1,5-3-0,8 | | Rplm 1,5-3-0,8 |

# PERFORATOR COMPONENTS

## TABLE 3 *(cont.)*

| Item | Description | PK50KL ORION | | PK63KL ORION | | PK73KL ORION | | PK89KL ORION | | PK102KL ORION | | PK114KL ORION | |
|---|---|---|---|---|---|---|---|---|---|---|---|---|---|
| | | D x L x S –D-cross dimensions; L -length; S –width across flat (thread), in | Part # | D x L x S –D-cross dimensions; L -length; S –width across flat (thread), in | Part # | D x L x S –D-cross dimensions; L -length; S –width across flat (thread), in | Part # | D x L x S –D-cross dimensions; L -length; S –width across flat (thread), in | Part # | D x L x S –D-cross dimensions; L -length; S –width across flat (thread), in | Part # | D x L x S –D-cross dimensions; L -length; S –width across flat (thread), in | Part # |
| 16 | Red insulated plug-in connector 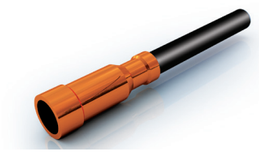 | | RshIm 1,5-4 | | RshIm 1,5-4 | | RshIm 1,5-4 | | RshIm 1,5-4 | | RshIm 1,5-4 | | RshIm 1,5-4 |
| 17 | Red insulated plug-in connector 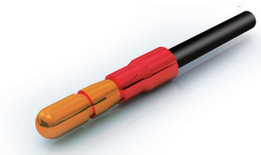 | | RshIp 1,5-4 | | RshIp 1,5-4 | | RshIp 1,5-4 | | RshIp 1,5-4 | | RshIp 1,5-4 | | RshIp 1,5-4 |
| 18 | Red insulated ring plug 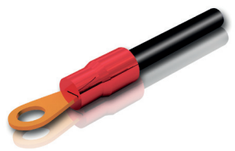 | | NKI 1,5-4 | | NKI 1,5-4 | | NKI 1,5-4 | | NKI 1,5-4 | | NKI 1,5-4 | | NKI 1,5-4 |
| 19 | Bottom plate (charge tube) 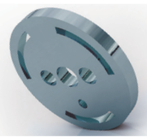 | | | 2 1/4"x0.24 | VGS73-01.103 | 2 1/4"x0.24 | VGS73-01.103 | 2 5/8"x0.24 | VGS89-06.103 | 3 7/32"x0.24 | VGS102-01.103 | 3 5/8"x0.24 | VGS114-01.103 |
| 20 | O-ring GOST 18829-73/9833-73 | | 041-045-25-2-6 | | 050-056-36-2-6 | | 060-066-36-2-6 | | 072-078-36-2-6 | | 086-092-36-2-6 | | 096-102-36-2-6 |
| 21 | O-ring GOST 18829-73/9833-73 | | | | 046-052-36-2-6<br>054-060-36-2-6 | | 054-060-36-2-6 | | 054-060-36-2-6 | | 054-060-36-2-6 | | 054-060-36-2-6 |
| 22 | O-ring GOST 18829-73/9833-73 | | 021-025-25-2-6 | | | | | | | | | | |

** GOST 18829-73 – Round O-rings for hydraulic and pneumatic devices.*

** GOST 9833-73 - Round O-rings for hydraulic and pneumatic devices.*

*Design and sizes.*

# PERFORATOR COMPONENTS

## TABLE 3 *(cont.)*

| Item | Description | PK50KL ORION | | PK63KL ORION | | PK73KL ORION | | PK89KL ORION | | PK102KL ORION | | PK114KL ORION | |
|---|---|---|---|---|---|---|---|---|---|---|---|---|---|
| | | D x L x S –D-cross dimensions; L -length; S –width across flat (thread), in | Part # | D x L x S –D-cross dimensions; L -length; S –width across flat (thread), in | Part # | D x L x S –D-cross dimensions; L -length; S –width across flat (thread), in | Part # | D x L x S –D-cross dimensions; L -length; S –width across flat (thread), in | Part # | D x L x S –D-cross dimensions; L -length; S –width across flat (thread), in | Part # | D x L x S –D-cross dimensions; L -length; S –width across flat (thread), in | Part # |
| 23 | Centralizer (optional) 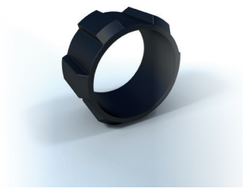 | - | - | - | - | - | - | 4 1/2"x1.42 | VGS89-02.013 | | VGS102-02.013 | | VGS114-02.013 |
| 24 | Cord [1] | GOST 7262-78 | | | | | | | | | | | |
| 25 | Cord PEV-2-0,56 | | | | | | | | | | | | |
| 26 | Screw M4 | | | | | | | | | | | | |
| 27 | Heat shrink tube | | | | | | | | | | | | |
| 28 | RUBICON® Separate Perforating Head 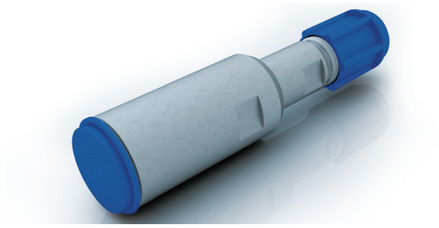 | | | | | | | | | | | | |
| 29 | Lock ring | | | | | | | | | | | | |
| 30 | Ready-assembled Charge tube 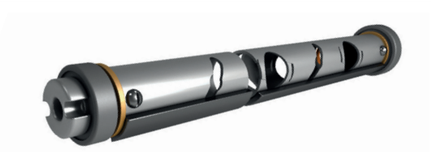 | | | 2 1/32"x45.16 | VGS63-08.100-01 | 2 1/8"x44.69 | VGS73-08.100-01<br>VGS73-07.100-01 | 2 16/25x45.2 | VGS89-07.110-01<br>VGS89-08.110-01<br>VGS89-27.100-01 | 3.23x44,57<br>3.23x46,06 | VGS102-07.100-01<br>VGS102-08.100-01 | 3,62x44,57 | VGS114-09.110-01 |

*1) Optional. Perforating system can be equipped by:*
*1. Cord P-274M, mark TU 16-505.221-78*
*2. Cord PRKA 1x0,75mark TU 16-505.317-76*

# PERFORATOR COMPONENTS

## TABLE 3 *(cont.)*

| Item | Description | PK50KL ORION | | PK63KL ORION | | PK73KL ORION | | PK89KL ORION | | PK102KL ORION | | PK114KL ORION | |
|---|---|---|---|---|---|---|---|---|---|---|---|---|---|
| | | D x L x S –D-cross dimensions; L -length; S –width across flat (thread), in | Part # | D x L x S –D-cross dimensions; L -length; S –width across flat (thread), in | Part # | D x L x S –D-cross dimensions; L -length; S –width across flat (thread), in | Part # | D x L x S –D-cross dimensions; L -length; S –width across flat (thread), in | Part # | D x L x S –D-cross dimensions; L -length; S –width across flat (thread), in | Part # | D x L x S –D-cross dimensions; L -length; S –width across flat (thread), in | Part # |
| 31 | Socket sleeve 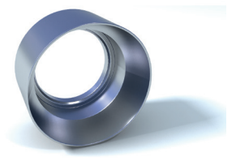 | | | 2 1/8"x1.14 | VGS63-07.020 | - | - | | | | | | |
| 32 | Carrier | | | 2 1/2"x50.79 | VGS63-08.001-01 | 2 7/8"x50.79 | VGS73-07.001-01 | | | | | | |
| 33 | Detonating Cord | Detonating Cord heat resistant DShT 165 | | TU 84-711-83 | | | | | | | | | |
| | | Detonating Cord heat resistant DShT 200 | | TU 84-711-83 | | | | | | | | | |
| | | DETOCORD RDX | | TU 7287-001-09344304-2014 | | | | | | | | | |
| | | DETOCORD HMX | | TU 7287-001-09344304-2014 | | | | | | | | | |
| | | DShS -160 | | TU 7287-002-09344304-2014 | | | | | | | | | |
| | | DShS -200 | | TU 7287-002-09344304-2014 | | | | | | | | | |
| 34 | Blasting cartridge | Blasting cartridge PVPD-N | | DIShV 773955.501 TU | | | | | | | | | |
| | | Blasting cartridge ED-PN | | TU 847513607.023-2001 | | | | | | | | | |
| | | Detonator A-150T | | | | | | | | | | | |
| 35 | Booster | Booster — Booster ORION-6 | | STO 57783950-003-2012 | | | | | | | | | |
| | | Booster — Booster ORON-7 | | STO 57783950-003-2012 | | | | | | | | | |

# TOOLS AND ACCESSORIES

## AUXILIARY SERVICE EQUIPMENT

# RUNNING ACCESSORY

Running accessories are used for safe fixation of perforator on wellhead and safe deployment of perforator into the well. Utilising the proper running accessory makes the assembly of perforator sections at the wellhead easier and more convenient for both wireline and tubing conveyed.

Item list:

- plate;
- Mounting wrench.

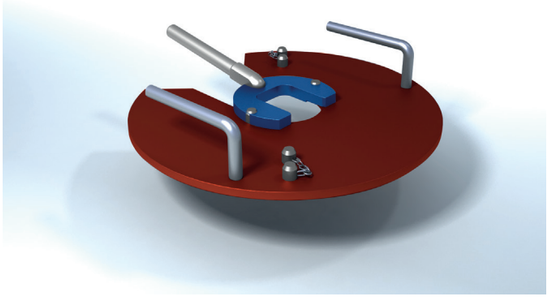

| Item | Part # | Assembly | Weight, lb | Overall dimensions, in | Applicability |
|---|---|---|---|---|---|
| 1 | PS VGS50 | Mounting wrench VGS 50-30.000<br>Plate VGS 63-40.000 | 4.4<br>37.48 | 13.19x5.35x2.95<br>19 5/8"x3.94 | PK50KL ORION |
| 2 | PS VGS63 | Mounting wrench VGS 63-30.000<br>Plate VGS 63-40.000 | 4.4<br>37.48 | 13.19x5.51x2.95<br>19 5/8"x3.94 | PK63KL ORION |
| 3 | PS VGS73 | Mounting wrench VGS 73-30.000<br>Plate VGS 89-40.000 | 6.61<br>35.27 | 13.78x6.5x2.95<br>19 5/8"x3.94 | PK73KL ORION |
| 4 | PS VGS89 | Mounting wrench VGS 89-30.000<br>Plate VGS 89-40.000 | 6.61<br>35.27 | 13.78x6.5x2.95<br>19 5/8"x3.94 | PK89KL ORION |
| 5 | PS VGS102 | Mounting wrench VGS 102-30.000<br>Plate VGS 89-40.000 | 6.61<br>35.27 | 13.78x6.5x2.95<br>19 5/8"x3.94 | PK102KL ORION |
| 6 | PS VGS114 | Mounting wrench VGS 114-30.000<br>Plate VGS 89-40.000 | 6.61<br>35.27 | 13.78x6.5x2.95<br>19 5/8"x3.94 | PK114KL ORION |



# CABLE HEAD

Cable Head is used to run the perforator on wireline and to transmit the electrical impulse.

Cable Head is used with the following wireline.

| Part # | Weight, lb | Overall dimensions, in |
|---|---|---|
| KG-40 ORION | 4.4 | 1 5/8"x9.45 |
| KG-50 ORION | 5.38 | 2"x11.02 |
| KG-60 ORION | 8.6 | 2 3/8"x12.4 |

# SAFETY CONTAINER

Safety container VGS-05.000 is designed for temporary storage of blasting cartridge during wireline conveyed perforator arming.

| Weight, lb | Overall dimensions, in |
|---|---|
| 2.42 | 5.35x4.13 |

# RUNNING SUB

Running sub is used for RIH/POOH operations of tubing conveyed perforators.

| Item | Description | Weight, lb | Overall Dimensions, in | Sleeve Marking | Sleeve Tread Type |
|---|---|---|---|---|---|
| 1 | Running sub VGS89-70.000-04 | 25.57 | 3 1/2"x25.79 | VGS89-70.003-02<br>VGS89-70.001-02 | 3-66<br>Tr60x4-LH |
| 2 | Running sub VGS50-70.000-02 | 15.21 | | VGS50-70.003<br>VGS63-50.001 | Tr46x4<br>Tr40x4 |
| 3 | Running sub VGS63-70.000-02 | 15.21 | 2 7/8"x26.38 | VGS63-70.003<br>VGS63-70.001-02 | Tr56x4<br>Tr60x4-LH |
| 4 | Running sub VGS63-70.000-03 | 15.21 | | VGS73-70.003-01<br>VGS89-70.001-02 | Tr56x4<br>Tr52x4-LH |
| 5 | Running sub VGS73-70.000-02 | 21.16 | 3 1/2"x25.79 | VGS73-70.003-01<br>VGS89-70.001-02 | Tr65x4<br>Tr60x4-LH |
| 6 | Running sub VGS89-70.000-02 | 21.16 | 3 1/2"x25.79 | VGS89-70.003-01<br>VGS89-70.001-02 | Tr76x4<br>Tr60x4-LH |
| 7 | Running sub VGS102-70.000-02 | 22.27 | 4"x25.79 | VGS102-70.003<br>VGS89-70.001-02 | Tr90×4<br>Tr60×4-LH |
| 8 | Running sub VGS114-70.000-02 | 25.13 | 4 1/2"x26.3 | VGS89-70.001-02<br>VGS114-70.003 | Tr60×4-LH<br>Tr100×4 |

# ACCESSORY FOR RIH/POOH OPERATIONS OF WIRELINE CONVEYED PERFORATORS

Accessory for RIH/POOH operations of wireline conveyed perforators is used on the wellhead. The accessory averts a risk for damaging of wireline. When using the accessory perforator carrier can be placed in a different position to the cable head.

The accessory is used to minimize manual operations during moving the perforating systems or perforating assemblies on the wellhead.

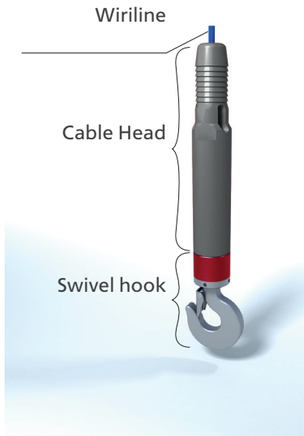


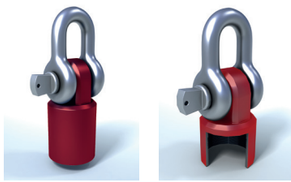

Swivel hook VGS-04.000

| Part # | Weight, lb | Overall Dimensions, in | Applicability |
|---|---|---|---|
| Hook assembly VGS-04.000 | 6.61 | 9.33×4.13 | Cable head KG-60 ORION |

| Item | Description | | Part # | Weight, lb | Overall Dimensions, in | Applicability |
|---|---|---|---|---|---|---|
| 1 | Holder | | VGS-04.000-01 | 6.17 | 8.66x4.33 | For connection with perforating head (M48x3 thread type) VGS63-01.002<br>VGS73-01.002<br>VGS 89-01.002<br>VGS 102-01.002<br>VGS 114-01.002 |
| 2 | Holder | | VGS-04.000-02 | 5.07 | 7.87x4.33 | For connection with cylindrical sub (Tr65x4 trapezoidal thread type) VGS73-01.004 |
| 3 | Holder | | VGS-04.000-03 | 6.17 | 7.87x4.33 | For connection with cylindrical sub (Tr76x4 trapezoidal thread type) VGS89-01.004 |
| 4 | Holder | | VGS-04.000-09 | 5.51 | 8.46x4.33 | For connection with conical sleeve (3-66 tool-joint thread) VGS73-80.000<br>VGS 89-80.000<br>VGS 102-80.000<br>VGS 114-80.000 |
| 5 | Holder | | VGS-04.000-05 | 7.27 | 7.87x4.33 | For connection with cylindrical sub (Tr90x4 trapezoidal thread type) VGS102-01.004 |
| 6 | Holder | | VGS-04.000-06 | 8.38 | 7.87x4.33 | For connection with cylindrical sub (Tr100x4 trapezoidal thread type) VGS114-01.004 |
| 7 | Holder | | VGS-04.000-07 | 7.27 | 7.87x4.33 | For connection with top sub (Tr70x4-LH trapezoidal thread type) |
| 8 | Holder | | VGS-04.000-08 | 8.40 | 8.66x4.33 | For connection with cylindrical sub (Tr44x4 trapezoidal thread type)<br><br>VGS50-01.004 |
| 9 | Holder | | VGS-04.000-011 | 5.07 | 7.87x4.33 | For connection with top sub (Tr56x4 LH trapezoidal thread type)<br>VGS63-01.004 |



# SAFETY SPACER

Safety spacer is used for tubing-conveyed perforator safe arming. As a result firing head is set in a safe distance from the nearest perforating charge installed. Also safety spacer can be used as a blank extension during perforation of several intervals in one run.

| Item | Part # | Weight, lb | Overall Dimensions, in |
|---|---|---|---|
| 1 | VGS63-02.000 | 50.7 | 2 1/2" x90.16 |
| 2 | VGS63-02.000-01 | 70.54 | 2 1/2" x 129.53 |
| 3 | VGS73-02.000 | 69.44 | 2 7/8" x90.16 |
| 4 | VGS73-02.000-01 | 99.2 | 2 7/8" x 129.53 |
| 5 | VGS89-02.000 | 95.9 | 3 1/2" x90.16 |
| 6 | VGS89-02.000-01 | 137.57 | 3 1/2" x 129.53 |
| 7 | VGS102-02.000 | 114.64 | 4" x90.16 |
| 8 | VGS102-02.000-01 | 156.53 | 4" x 129.53 |
| 9 | VGS114-02.000 | 136.69 | 4 1/2" x90.16 |
| 10 | VGS114-02.000-01 | 191.8 | 4 1/2" x 129.53 |

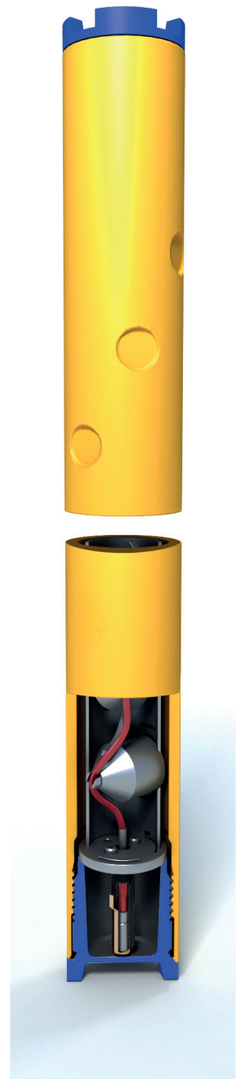

## SPECIAL TOOL FOR CRIMPING

Tool is used to plug-in ring points-connections and to skin the cable.

| Part # | Weight, lb | Overall Dimensions, in |
|---|---|---|
| VGS89-60.000 | 0.62 | 9.25x2.52x0.47 |

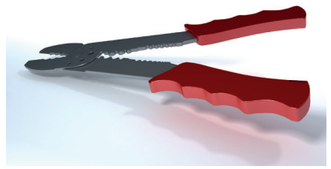

## CHARGE TUBE INSTALLATION WRENCH

Wrench is used to install the charge tube into the gun carrier.

| Part # | Weight, lb | Overall Dimensions, in |
|---|---|---|
| VGS50-50.000 | 0,30 | 3.94×4.72 |
| VGS63-50.000 | 0.33 | 7.87x4.72 |
| VGS89-50.000 | 0.55 | 7.87x4.72 |

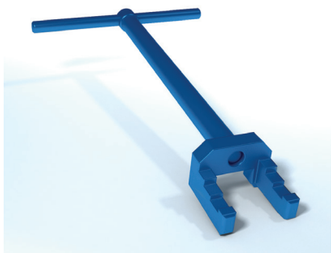

The tool allows to exactly install the charge tube into the gun carrier.

## HANDLE TO CARRY OVER PERFORATOR CARRIERS

VGS-06.000 Handle is used to carry over perforator carriers and also to screw and unscrew safety caps from gun carriers.

| Part # | Weight, lb | Overall dimensions, in |
|---|---|---|
| VGS-06.000 | 1.76 | 7.09x1.06 |

The tool makes the process of carrying over perforator carriers more convenient and safe.

## RAMROD

VGS-15.000 RAMROD is used to reeve the detonating cord through the charge tube cavity.

| Part # | Weight, lb | Overall dimensions, in |
|---|---|---|
| VGS - 15.000 | 0.66 | 12.6x0.38 |

# SUBS AND SLEEVES

| Item | Sub types | Name | Part # | Dimensions | | |
|---|---|---|---|---|---|---|
| | | | | D, in | d, in | L, in[2)] |
| 1 | Sleeve (M[1)]/M[1)]) | M-60/M-60 | | | | |
| | 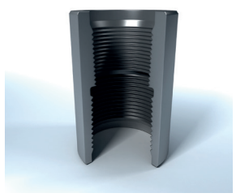 | MV-60/M-60 | | | | |
| | | MV-60/MV-60 | | | | |
| | | MV-89/M-73 | VGS73-NKT-021 | 4 1/2" | 2 5/8" | 5.47 |
| | | MV-73/M-73 | VGS73-NKT-002 | 2 5/8" | | 5.24 |
| | | MV-73/MV-73 | VGS73-NKT-016 | 3 11/16" | 2 13/16" | 5.25 |
| | | M-60/M-73 | VGS73-NKT-006 | 2 5/32" | | 4.80 |
| | | MV-60/M-73 | VGS73-NKT-001 | 2 5/15" | | 5.08 |
| | | M-89/M-73 | VGS73-NKT-021 | 4 1/4" | 2 5/8" | 5.47 |
| 2 | SUB (M[1)]/N[1)]) | M-60/N-60 | VGS73-NKT-005 | 2 7/8" | 1 11/32" | 6.30 |
| | 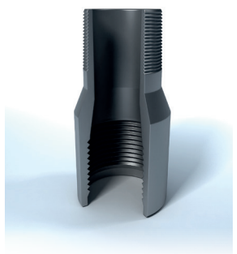 | M-60/N-73 | | | | |
| | | M-60/NV-60 | | | | |
| | | M-60/NV-73 | | | | |
| | | M-73/N-60 | VGS73-NKT-003 | 3 9/16" | 1 3/4" | 7.48 |
| | | M-73/N-60 | VGS73-NKT-003-01 | 3 9/16" | 1 11/32" | 7.87 |
| | | M-73/N-73 | VGS73-NKT-017 | 3 9/16" | 2 3/8" | 7.48 |
| | | M-73/NB-60 | | | | |
| | | M-73/NV-73 | VGS73-NKT-012 | 3 9/16" | 2 5/16" | 6.90 |
| | | MV-60/N-60 | | | | |
| | | MV-60/N-73 | VGS73-NKT-004 | 3 7/64" | 2 5/16" | 6.7 |
| | | MV-73/N-60 | VGS73-NKT-007 | 3 3/4" | 2" | 7.48 |
| | | MV-73/N-73 | VGS73-NKT-008 | 3 3/4" | 2 5/16" | 7.48 |
| | | MV-60/NV-60 | | | | |
| | | MV-60/NV-73 | | | | |
| | | MV-73/NV-60 | | | | |
| | | MV-73/NV-73 | VGS73-NKT-009 | 3 3/4" | 2 3/8" | 7.48 |
| | | MV-89/N-73 | VGS73-NKT-015 | 4 1/2" | 2 5/16" | 7.87 |
| | | M-73/NV-89 | VGS73-NKT-014 | 3 3/4" | 2 5/16" | 7.08 |
| | | M-48/NV-48 | VGS48-NKT-001 | 2 3/16" | 1 9/16" | 4.33 |
| | | MV-89/N-60 | VGS60-NKT-010 | 4 1/2" | 1 3/4" | 7.87 |
| | | M-89/N-60 | VGS60-NKT-011 | 4 1/4" | 1 3/4" | 7.87 |
| | | MV-73/NV-89 | VGS73-NKT-022 | 3 3/4" | 2 1/2" | 5.24 |
| | | MV-73/N-89 | VGS73-NKT-023 | 3 11/16" | 2 1/2" | 5.51 |
| | | M-89/NV-73 | VGS73-NKT-024 | 4 1/4" | 1 3/4" | 7.87 |
| | | MV-89/NV-73 | VGS73-NKT-025 | 4 1/2" | 2 1/2" | 7.48 |
| | | N-73/M-89 | VGS73-NKT-026 | 4 1/4" | 2 5/16" | 7.87 |

| Item | Sub types | Name | Part # | Dimensions | | |
|---|---|---|---|---|---|---|
| | | | | D, in | d, in | L, in[2)] |
| 3 | SUB (N[1)]/N[1)]) | N-60/N-60 | | | | |
| | | NV-60/N-60 | | | | |
| | | NV-60/NV-60 | | | | |
| | | N-73/N-73 | VGS73-NKT-010 | 2 7/8" | 2 1/2" | 106.3 |
| | | NV-73/N-73 | | | | |
| | | NV-73/NV-73 | | | | |
| | | N-60/N-73 | VGS73-NKT-011 | 3 9/16" | 1 3/4" | 118.1 |
| | | NV-60/N-73 | | | | |
| | | NV-73/N-60 | | | | |
| | | N-60/M-NKM73 | VGS73-NKT-013 | 3 9/16" | 1 3/4" | 7.48 |

*Note:*
*M — sub box end;*
*H —sub pin end;*
*D — OD, mm*
*d — ID, mm*

**1) Different thread types are available on customer`s request (NV, EU, 3, M, Tr);*

**2) Different sub length are available on customer`s request.*

# DRIFTS

Drifts are used in oil and gas wells during drift run in order to ensure accident-free run and set PSh ORION type packers.

| Feature | Specifications | | | | | | | |
|---|---|---|---|---|---|---|---|---|
| | VGS-Sh-PSh82 | VGS-Sh-PSh88 | VGS-Sh-PSh92 | VGS-Sh-PSh102 | VGS-Sh-PSh110 | VGS-Sh-PSh118 | VGS-Sh-PSh136 | VGS-Sh-PSh145 |
| Min casing ID to run the drift, in | 3,46 | 3,78 | 3,94 | 4,29 | 4,61 | 4,92 | 5,67 | 6,14 |
| Drift OD, in | 3,23 | 3,46 | 3,62 | 4,02 | 4,33 | 4,65 | 5,35 | 5,71 |
| Drift length, in | 64,57 | | | | | | | |
| Drift weight, lbs | 54,23 | 59,52 | 63,49 | 87,08 | 96,12 | 109,35 | 150,58 | 159,17 |
| Downhole conditions | oil, formation fluid, water | | | | | | | |

Note:
Limit deviations are acceptable:
- overall dimensions, ± 2%;
- weight,± 3%

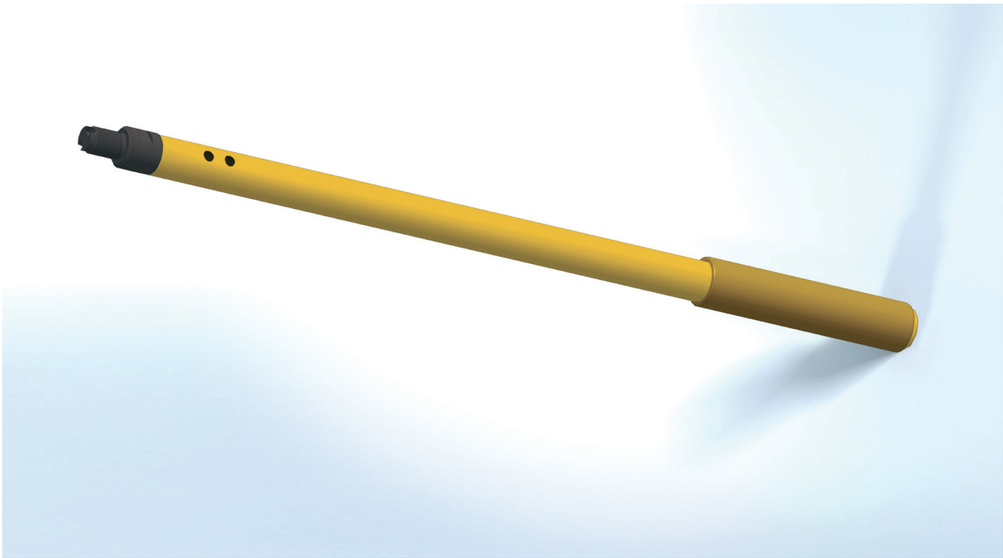

# PERFORATOR ASSEMBLING STAND

VGS-14.000 Assembling stand for perforator is used for convenient perforators assembling near wellhead.

| Part # | Weight, lb | Overall Dimensions, in |
|---|---|---|
| VGS - 14.000 | 30.86 | 23.62x11.81x11.81 |

# CABLE CLEANNING TOOL

VGS-09.000 Cable cleaning tool is used to clean the wireline from well fluid.

| Part # | Weight, lb | Overall Dimensions, in |
|---|---|---|
| VGS - 09.000 | 11.24 | 6.22x7.75x22.05 |

# BARS

VGS004 Bars are used as a means for mechanically activation of tubing conveyed perforating systems. The top end of a bar is designed with a fishing neck for easy fishing. It is pulled out of the well with VGS-22.000 BAR Fishing Tool.

Depending upon the application the bar can be deployed by hand or released from the lubricator. Its primary use is to activate firing heads. Additionally drop bars can be used to knock out restrictions in tools such as debris barriers, surge tools or to activate pressure release subs.

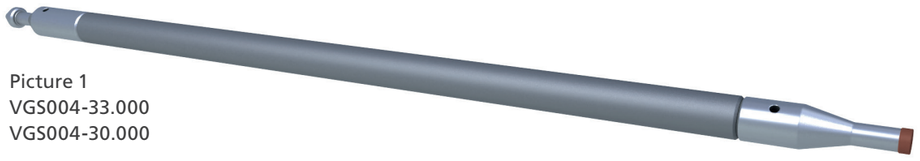

Picture 1
VGS004-33.000
VGS004-30.000

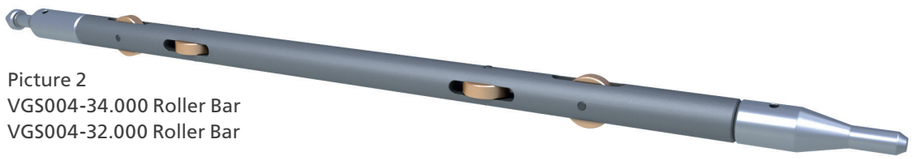

Picture 2
VGS004-34.000 Roller Bar
VGS004-32.000 Roller Bar

# BAR FISHING TOOL

| Part # | Weight, lb | Overall Dimensions, in |
|---|---|---|
| VGS-22.000 | 28.44 | 1 5/8x53.54 |

# SUB (FROM CABLE HEAD TO PEFRORATING HEAD)

The sub is used to connect wireline cable head to perforating head.

| Part # | Weight, lb | Overall Dimensions, in |
|---|---|---|
| VGS - 11.000 | 5.51 | 2 3/8x19.21 |

# PERFORATOR FISHING TOOL (SHORT GRAB TYPE) 85/66(60)

Perforator fishing tool of short grab type 85/66(60) is used to grab the sub thread of a PK73KL ORION perforator and to pull it from the well.

| Part # | Weight, lb | Overall Dimensions, in |
|---|---|---|
| VGS - 12.000 | 14.33 | 3 3/8x14.13 |

# DIFFERENTIAL PRESSURE SUB

VGS Differential pressure sub is used to achieve an underbalance perforating condition between tubing and formation. The sub has a thin high strength ceramic disc which prevents communication between the tubing and the annulus until a drop bar released from the surface breaks it. Ports located below the disc allow the fluid to flow into the tubing and circulate after the perforation. A non-ported version is available for pulse cleaning of perforations.

**DESIGN FEATURE AND APPLICATION:**

- Reliable cost effective tool to achieve underbalance;
- Differential pressure is up to 10000 PSI on the convex side;
- Ported version provides large flow area;
- Ceramic disc acts as a debris catch;
- Can be run with any packer;
- Available in standard EUE thread.

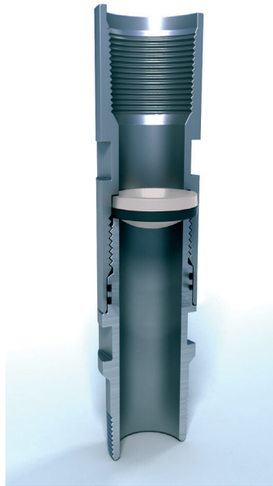

Non-ported differential sub

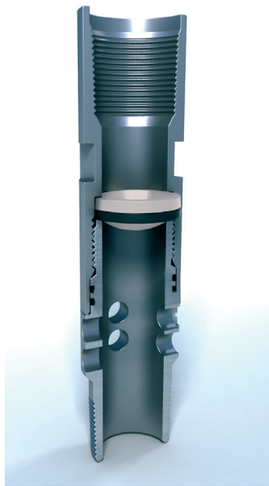

Ported differential sub

**DESCRIPTION**

| Item Name | Specifications | | | |
|---|---|---|---|---|
| | Differential pressure sub Non-ported | | Differential pressure sub Ported | |
| Part # | VGS60-210.000 | VGS73-210.000-01 | VGS60-211.000 | VGS73-211.000-01 |
| Thread size and type, mm | V-60 | V-73 | V-60 | V-73 |
| OD, in | 3" | 3 5/8" | 3" | 3 5/8" |
| ID, in | 2" | 2 1/2" | 2" | 2 1/2" |
| Max pressure, PSI* | 10005 | | | |
| Max temperature, F | 392 | | | |
| Weight, lb | 10.58 | 16.36 | 10.36 | 16.09 |
| Overall length, in | 12.32 | 13.31 | 12.32 | 13.31 |
| Redress kit part # | RK VGS60-210.000 | RK VGS73-210.000 | RK VGS60-210.000 | RK VGS73-210.000 |

*Max pressure is limited by breaking strength of the ceramic disc.



# ISOLATION SUB

A frangible ceramic disc is used in isolation subs to keep debris and heavy mud from setting on a top of a mechanical TCP firing head. Circulating ports located directly above the disc allow such solids to exit the tubing without becoming an obstruction to the firing mechanism. Clean light fluid is held between the disc and the firing head to ensure the drop bar impacts the firing pin with the required velocity to fire.

**Design features and application:**

- Isolates the firing head from debris or mud;
- Seals a clean fluid column on top of the firing head;
- Allows safe fluid circulation to make a pressure drawdown;
- Available in standard EUE thread.

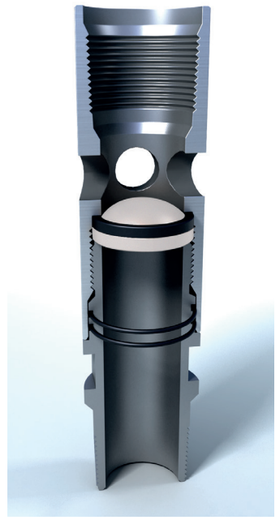

**DESCRIPTION**

| Item Name | Specifications | |
|---|---|---|
| Part # | VGS60-220.000 | VGS73-220.000-01 |
| Thread size and type, mm | V-60 | V-73 |
| OD, in | 3" | 3 5/8" |
| ID, in | 2" | 2 1/2" |
| Max pressure, PSI | 10005 | |
| Max temperature, F | 392 | |
| Weight, lb | 10.36 | 16.31 |
| Flow area, | 0.79 | 2.05 |
| Overall length, in | 12.32 | 13.31 |
| Redress kit part # | RK VGS60-210.000 | RK VGS73-210.000 |

# FILL/FLOW SUB (SLUDGE TRAP)

Fill/Flow Sub (Sludge trap) is designed to allow fluid to fill the TCP string while running in the well. It also acts as a primary passage for reservoir production after detonation. An additional feature is a glass disc which is used to prevent debris from falling on the Firing Head before its activation.

**DESIGN FEATURES AND APPLICATION:**

- Ports provide flow area larger than the tubing bore;
- Effective method of reducing debris deposit on downhole tools;
- Simple design permits easy redress;
- Available in standard EUE thread;
- It is possible to use autorelease assembly

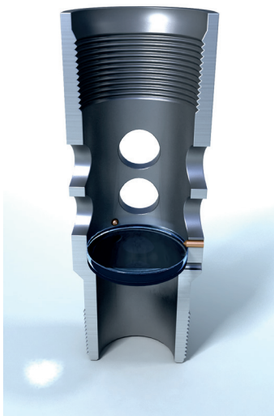

**DESCRIPTION**

| Item Name | Specifications | |
|---|---|---|
| Part # | VGS60-100.000 | VGS73-100.000 |
| Thread size and type, mm | V-60 | V-73 |
| OD, in | 3" | 3 5/8" |
| Min ID, in | 1 3/4" | 2 1/4" |
| Weight, lb | 7.72 | 11.02 |
| Flow area, $cm^2$ | 5.08 | 7.62 |
| Overall length, in | 8.86 | 9.25 |
| Redress kit part # | PK VGS60-100.000 | PK VGS73-100.000 |



# PRESSURE RELEASE SUB

Pressure Release Sub is used to open a communication port between the annulus and the tubing once a packer is set. The sub has a sealed hollow steel pin. Once a packer is set equalization between the tubing and the annulus is achieved by breaking the pin with wireline tools or drop bar.

**Design features and application:**

- Allows packer pressure integrity testing;
- Reduce pressure transients when the vent or differential sub opens;
- Simple mechanical process for breaking the pin;
- Pin is sized to prevent sticking of wireline tools;
- Designed to ensure high pressure ratings;
- Available in standard EUE thread.

**DESCRIPTION**

| Item Name | Specifications | |
|---|---|---|
| Part # | VGS60-130.000 | VGS73-130.000 |
| Thread size and type, mm | V-60 | V-73 |
| OD, in | 3" | 3 5/8" |
| ID, in | 2" | 2 3/8" |
| Max pressure, PSI | 10005 | |
| Max temperature, F | 392 | |
| Weight, lb | 6.17 | 8.38 |
| Overall length, in | 7.87 | 7.87 |

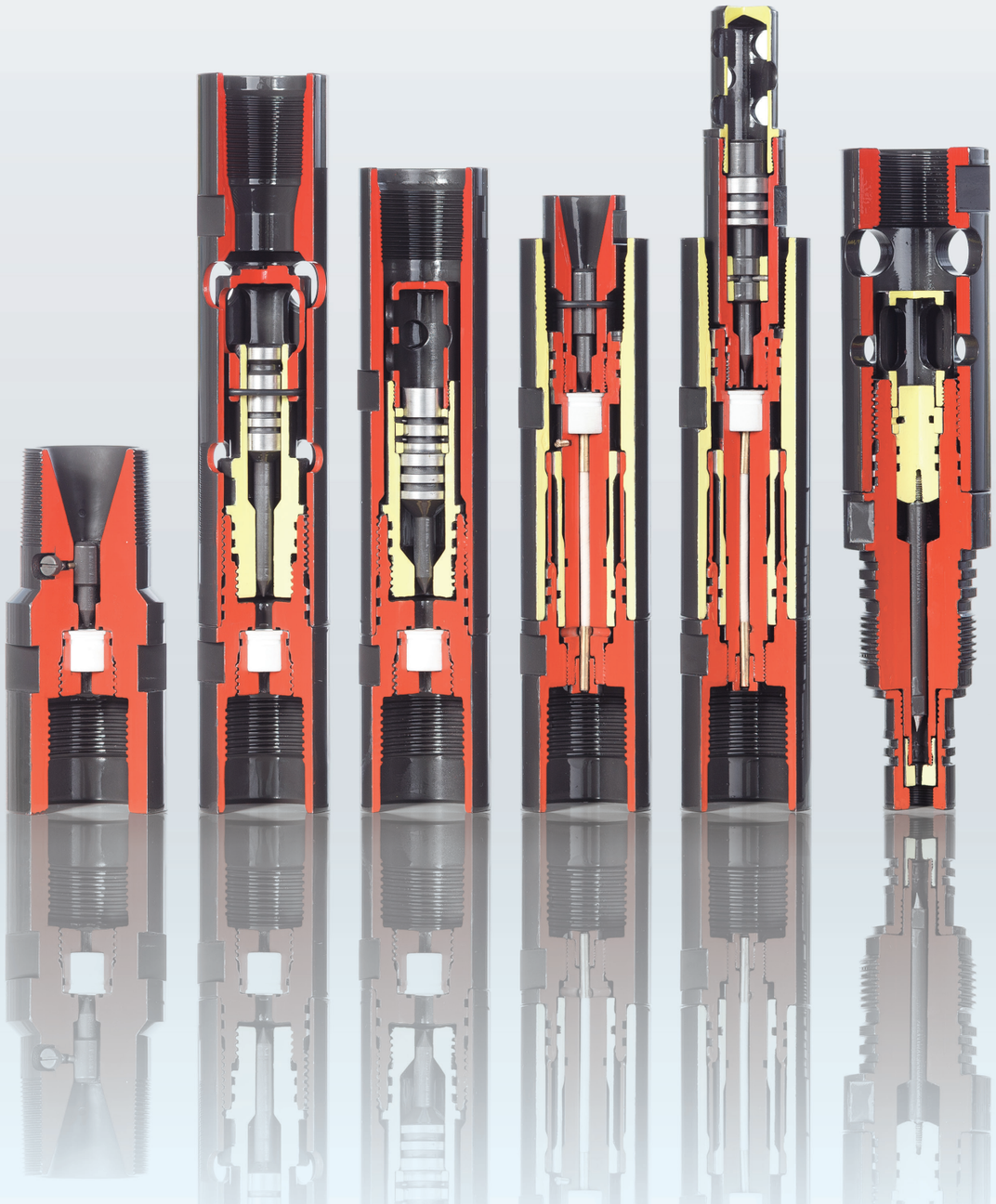

# FIRING HEADS

GS ORION-01, GS ORION-02,
GS ORION-03, GS ORION-04,
GS ORION-05, GS ORION-06,
RUBEZH-ORION 11-73

# ORION-01 MECHANICAL FIRING HEAD

Mechanical Firing Head ORION-01 is used to activate tubing conveyed perforating systems. Firing Head is detonated by releasing a drop bar into the tubing from the surface.

**NOTE:** Standard Drop Bars are used for wells up to 40° deviation. Deviations from 40° to 60° require a roller assisted bar to fire.

**DESIGN FEATURES AND APPLICATION:**

- Can be used during perforation at drawdown (packer and packer-less application);
- Can be used in deviated wells with 60° deviation.

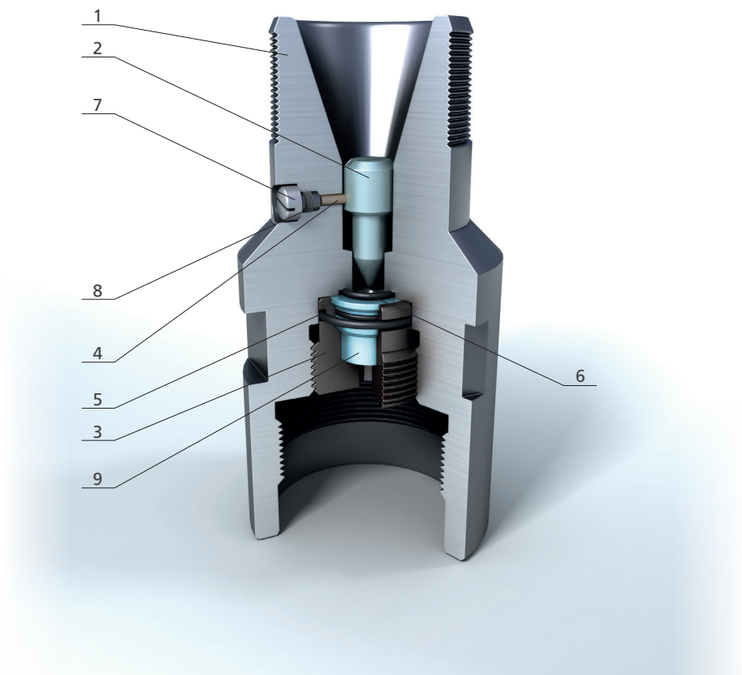


**DESCRIPTION**

| Item | Item Name | Specification | |
|---|---|---|---|
| | | GS ORION-01-73 | GS ORION-01-89 |
| 1 | Thread size and type | Tubing 60 | Tubing 73 |
| 2 | Gun connection | Top sub (Tr60x4-LH) | |
| 3 | Applicability | PK73KL ORION, PK89KL ORION, PK102KL ORION, PK114KL ORION | |
| 4 | Max OD*, in | 2 7/8" | 3 1/2" |
| 5 | Max hydraulic pressure, PSI | 16000 | |
| 6 | Max temperature, F | 400 | |
| 7 | Perforator operation | 5 | |
| 8 | Weight*, lb | 7.83 | 13.23 |
| 9 | Overall length*, in | 7.283 | 7.677 |

**ITEM LIST**

| Item | Item name | Specification | |
|---|---|---|---|
| | | GS ORION-01-73 | GS ORION-01-89 |
| 1 | Housing | VGS - GS -001 | VGS - GS -001-01 |
| 2 | Firing pin | VGS - GS -002 | |
| 3 | Plug | VGS - GS -003 | |
| 4 | Core | VGS - GS -004 | |
| 5 | O-ring 034-038-25 | VGS - GS -005 | |
| 6 | O-ring 021-025-25 | VGS - GS -007 | |
| 7 | Set Screw | VGS - GS -007 | |
| 8 | O-ring 005-008-19 | GOST 18829-73/9833-73 | |
| 9 | Initiator | Percussion Initiator ORION | |
| | Key 7812-0376X9 | | |
| | Redress kit | RK VGS ORION-01 | |

# ORION-02 HYDROMECHANICAL FIRING HEAD

ORION-02 Hydromechanical Firing Head is used for initiating tubing conveyed perforating systems. The firing head allows the gun system to be detonated by releasing a drop bar into the tubing or pumping a rubber ball.

**NOTE:**

Standard Drop bar or Rubber Ball can be used to initiate the Hydromechanical FH in the wells up to 40° deviation.

Deviations from 40° to 60° require a roller assisted bar or a rubber ball.

Deviations from 60° to 180° require only rubber ball.

**DESIGN FEATURES AND APPLICATION:**

- Maintains pressure integrity before and after firing;
- Can be used during perforation at drawdown (packer and packer-less application);
- Can be used in deviated or horizontal wells with 180° deviation.

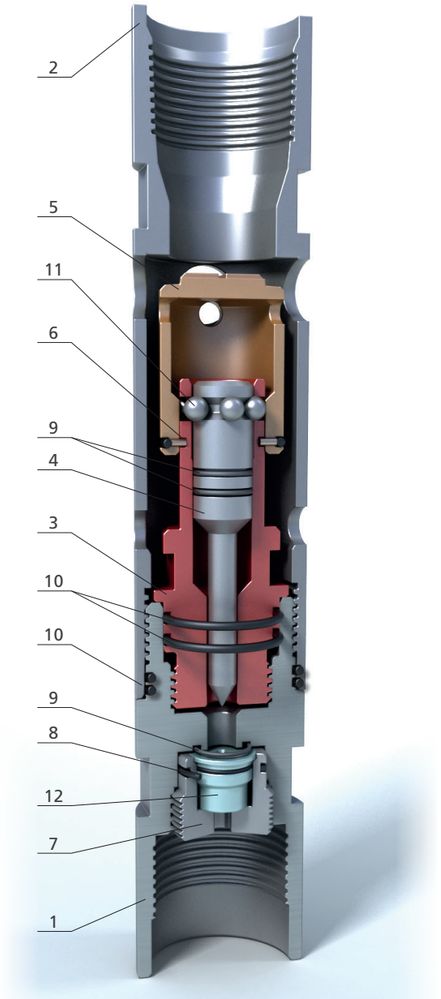


**DESCRIPTION**

| Item | Item Name | Specification | | |
|---|---|---|---|---|
| | | GS ORION-02-63 | GS ORION-02-73 | GS ORION-02-89 |
| 1 | Thread size and type | Tubing V-48 | Tubing 60 | Tubing 73 |
| 2 | Gun connection | Top sub (Tr52×4-LH) | Top sub (Tr60×4-LH) | |
| 3 | Applicability | PK63KL ORION | PK73KL ORION, PK89KL ORION, PK102KL ORION, PK114KL ORION | |
| 4 | Max OD*, in | 2 1/2" | 2 7/8" | 3 1/2" |
| 5 | Max hydraulic pressure, PSI | 16000 | | |
| 6 | Min permissible hydrostatic pressure, PSI | 290 | | |
| 7 | Max hydraulic pressure, no operation, PSI | 70 | | |
| 8 | Max temperature, F | 400 | | |
| 9 | Perforator operation | 5 | | |
| 10 | Weight*, lb | 10.36 | 16.09 | 26.24 |
| 11 | Overall length, in | 13.385 | 15.551 | |

**ITEM LIST**

| Item | Item Name | Specification | | |
|---|---|---|---|---|
| | | GS ORION-02-63 | GS ORION-02-73 | GS ORION-02-89 |
| 1 | Bottom sub | VGS-BSG-001-02 | VGS-BSG-001 | VGS-BSG-001-01 |
| 2 | Housing | VGS-BSG-002-02 | VGS-BSG-002 | VGS-BSG-002-01 |
| 3 | Firing pin housing | VGS-BSG-003-02 | VGS-BSG-003 | |
| 4 | Firing pin | VGS-BSG-004-02 | VGS-BSG-004 | |
| 5 | Cup | VGS-BSG-005-02 | VGS-BSG-005 | |
| 6 | Pin | VGS-BSG-006 | | |
| 7 | Plug | VGS-BSG-003 | | |
| 8 | O-ring | 034-038-25 | VGS-BSG-005 | |
| 9 | O-ring | 021-025-25 | VGS-BSG-007 | |
| 10 | O-ring GOST 18829-73/9833-73 | 034-040-36 | VGS-BSG-008 | |
| | O-ring | 050-056-36 | 060-066-36 | - |
| | O-ring | 017-021-25 | - | - |
| 11 | Ball 8-40 | GOST 3722-81 | | |
| 12 | Initiator | Percussion Initiator ORION | | |
| | Redress kit | RK VGS ORION-02-63 | RK VGS ORION-02 | RK VGS ORION-02-89 |

Note: *on customer`s request

# ORION-03 CIRCULATING AND NON-CIRCULATING HYDRAULIC FIRING HEAD

ORION-03 Hydraulic Firing Head is used to initiate tubing conveyed perforating systems. It is activated by applying hydraulic or tubing pressure depending on the type of FH housing.

The non-circulating Firing Head GS ORION-03-...-00 (FH housing without circulating ports) doesn`t allow wellbore fluid to safely circulate through tubing space.

The circulating firing head GS ORION-03-...-01 (FH housing with circulating ports) allows wellbore fluid to safely circulate through tubing space.

## DESCRIPTION

| Item | Item Name | Specification | | | | | |
|---|---|---|---|---|---|---|---|
| | | Non-Circulating Firing Head | | | Circulating Firing Head | | |
| | | GS ORION-03-50-00 | GS ORION-03-63-00 | GS ORION-03-73-00 | GS ORION-03-50-01 | GS ORION-03-63-01 | GS ORION-03-73-01 |
| 1 | Thread size and type | Tr44x4 | Tubing V-48 | Tubing 60 | Tr44x4 | Tubing V-48 | Tubing 60 |
| 2 | Gun connection | Tr40x4 | Tr52×4-LH | Tr60×4-LH | Tr40x4 | Tr52×4-LH | Tr60×4-LH |
| 3 | Applicability | PK 50KL ORION, PK63KL ORION, PK73KL ORION, PK89KL ORION, PK102KL ORION, PK 114KL ORION | | | | | |
| 4 | Max OD*, in*[1] | 2" | 2 1/2" | 2 7/8" | 2" | 2 1/2" | 2 7/8" |
| 5 | Max hydrostatic pressure (max 24 pins required), PSI | 6961.81 | 9282.42 | 13923,62 | 6961.81 | 9282.42 | 13923,62 |
| 6 | Min hydrostatic pressure (min 2 pins required), PSI | 580.15 | 725,19 | 1160,3 | 580.15 | 725,19 | 1160,3 |
| 7 | Maximum duration on depth at max Temp[1)], hour | 1 hr at 482 F or 100 hrs at 446 F | | | | | |
| 8 | Perforator operation | 5 | | | | | |
| 9 | Weight, lb*[1] | 7.72 | 10.36 | 15.21 | 7.05 | 10.14 | 15.21 |
| 10 | Overall length, in*[1] | 13.39 | 12.72 | 13.39 | 14.76 | 12.72 | 13.39 |

Note:*
Time is also limited by max allowed temperature of other gun components, containing explosives (detonator, booster and detonating cord) and O-ring temperature resistance;
*1 Following limit deviations are allowed:
- Overall dimensions, ± 2%;
- Weight, ± 3%.

## ITEM LIST

| Item | Item Name | Specification | |
|---|---|---|---|
| | | GS ORION-03-63-00 | GS ORION-03-73-00 |
| 1 | Bottom sub | VGS - GSG -001-01 | VGS - GSG -001 |
| 2 | Non-circulating housing | VGS - GSG -002-02 | VGS - GSG -002 |
| 4 | Firing pin housing | VGS - GSG -003-01 | VGS - GSG-003 |
| 5 | Plug | VGS - GSG -004-01 | VGS - GSG -004 |
| 6 | Firing pin | VGS - GSG -005-01 | VGS - GSG -005 |
| 7 | Cup | VGS - GSG -006-01 | VGS - GSG -006 |
| 8 | Pin | VGS - GSG -007-01 | VGS - GSG -007 |
| 9 | Plug | VGS - GSG -003 | |
| 10 | O-ring GOST 18829-73/9833-73 | 021-025-25 | |
| 11 | O-ring GOST 18829-73/9833-73 | 023-028-36 | 027-033-36 |
| 12 | O-ring GOST 18829-73/9833-73 | 034-038-25 | |
| 13 | O-ring GOST 18829-73/9833-73 | 035-041-36 | 044-050-36 |
| 14 | O-ring GOST 18829-73/9833-73 | 050-056-36 | 060-066-36 |
| 15 | Initiator | Percussion Initiator ORION | |
| 16 | Redress Kit | RK GS ORION-03-63 | RK GS ORION-03-73 |

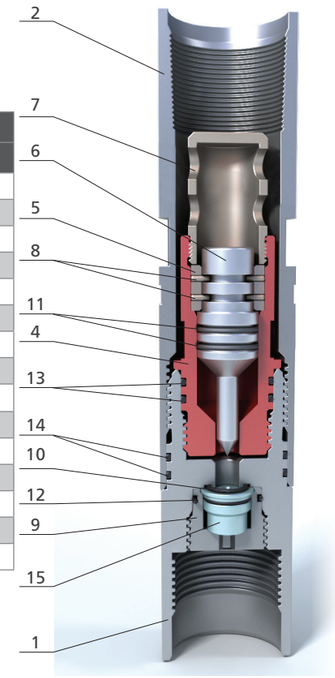


*Non circulating Firing Head*

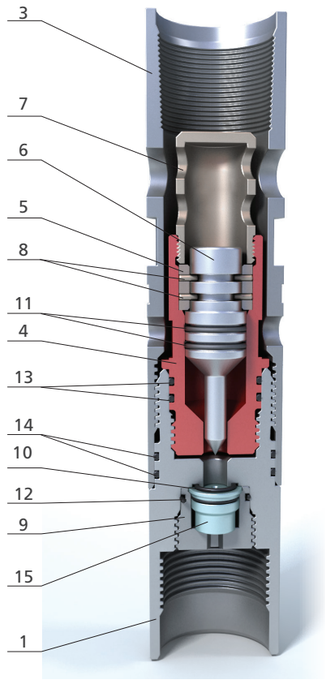


*Circulating Firing Head*

## ITEM LIST

| Item | Item Name | Specification | |
|---|---|---|---|
| | | GS ORION-03-63-01 | GS ORION-03-73-01 |
| 1 | Bottom sub | VGS - GSG -001-01 | VGS - GSG-001 |
| 3 | Circulating housing | VGS - GSG -002-03 | VGS - GSG-002-01 |
| 4 | Firing pin housing | VGS - GSG -003-01 | VGS - GSG -003 |
| 5 | Plug | VGS - GSG -004-01 | VGS - GSG -004 |
| 6 | Firing pin | VGS - GSG -005-01 | VGS - GSG -005 |
| 7 | Cup | VGS - GSG -006-01 | VGS - GSG -006 |
| 8 | Pin | VGS - GSG-007-01 | VGS - GSG -007 |
| 9 | Plug | VGS - GSG -003 | |
| 10 | O-ring GOST 18829-73/9833-73 | 021-025-25 | |
| 11 | O-ring GOST 18829-73/9833-73 | 023-028-36 | 027-033-36 |
| 12 | O-ring GOST 18829-73/9833-73 | 034-038-25 | |
| 13 | O-ring GOST 18829-73/9833-73 | 035-041-36 | 044-050-36 |
| 14 | O-ring GOST 18829-73/9833-73 | 050-056-36 | 060-066-36 |
| 15 | Initiator | Percussion Initiator ORION | |
| 16 | Redress Kit | RK GS ORION-03-63 | RK GS ORION-03-73 |

# ORION-04 AUTO RELEASE MECHANICAL FIRING HEAD

Firing Head is used to initiate tubing conveyed perforating systems by releasing a drop bar into the tubing. Firing Head automatically releases the perforating gun assembly from the tubing.

## DESCRIPTION

| Item | Item Name | Specification |
|---|---|---|
| | | GS ORION-04-73 |
| 1 | Tread size and type, mm | Tubing 60 |
| 2 | Gun connection | Tr60×4-LH |
| 3 | Applicability | PK63KL ORION, PK73KL ORION, PK89KL ORION, PK102KL ORION, PK114KL ORION |
| 4 | Max OD, in [2)] | 2 7/8" |
| 5 | Max hydraulic pressure, PSI | 15954 |
| 6 | Maximum duration on depth at max Temp [1)] | 1 hr at 482 F or 100 hrs at 446 F |
| 7 | Perforator operation | 1 |
| 8 | Weight, lb [2)] | 15.87 |
| 9 | Overall length, in [2)] | 13 |

Note:*
*1) Time is also limited by max allowed temperature of other gun components, containing explosives (detonator, booster and detonating cord) and O-ring temperature resistance;
*2) Following limit deviations are allowed:
- Overall dimensions, ± 2%;
- Weight, ± 3%.

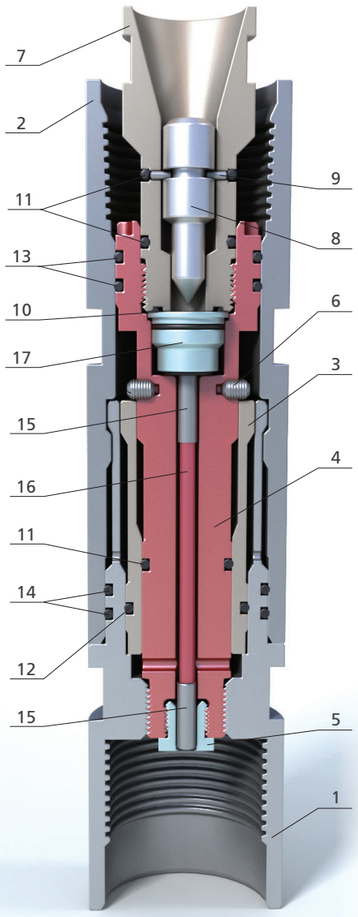


## ITEM LIST

| Item | Item Name | Part # | Qty |
|---|---|---|---|
| 1 | Sub | VGS - GSR -001 | 1 |
| 2 | Housing | VGS - GSR -002 | 1 |
| 3 | Plug | VGS - GSR -003 | 1 |
| 4 | Rod | VGS - GSR -004 | 1 |
| 5 | End plug | VGS - GSR -005 | 1 |
| 6 | Set screw | VGS - GSR -006 | 2 |
| 7 | Firing pin housing | VGS - GSR -007 | 1 |
| 8 | Firing pin | VGS - GSR -008 | 1 |
| 9 | Pin | VGS - BSG -006 | 2 |
| 10 | O-ring | 021-025-25 | 1 |
| 11 | O-ring | 027-033-36 | 3 |
| 12 | O-ring | 039-045-36 | 1 |
| 13 | O-ring | 046-052-36 | 2 |
| 14 | O-ring | 054-060-36 | 2 |
| 15 | Booster | Booster ORION | 2 |
| 16 | Detonating cord [1)] | | 4.5" |
| 17 | Initiator | Percussion Initiator ORION | 1 |

# ORION-5 AUTO RELEASE HYDRAULIC FIRING HEAD

ORION-05 FIRING HEAD is used to detonate tubing conveyed perforating systems hydraulically.

After activation Firing Head automatically releases the perforating gun assembly from the tubing.

## DESCRIPTION

| Item | Item Name | Specification GS ORION-05-73 |
|---|---|---|
| 1 | Thread size and type | Tubing 60 |
| 2 | Gun connection | Tr60×4-LH |
| 3 | Applicability | PK63KL ORION, PK73KL ORION, PK89KL ORION, PK102KL ORION, PK114KL ORION |
| 4 | Max OD [2], in | 2 7/8" |
| 5 | Max hydrostatic initiation pressure, PSI Max 12 pins. | 6961,81 |
| 6 | Min hydrostatic initiation pressure, PSI Min 2 pins. | 1160,3 |
| 7 | Maximum duration on depth at max Temp | 1 hr at 482 F or 100 hrs at 446 FF |
| 8 | Perforator operation | 1 |
| 9 | Weight [2], lb | 17.09 |
| 10 | Overall length [1], in | 16.89 |

Note:*
1) Can be elongated by changing the rubber mix of O-rings;
2) Following limit deviations are allowed:
- Overall dimensions ± 2%,
- Weight ± 3%.

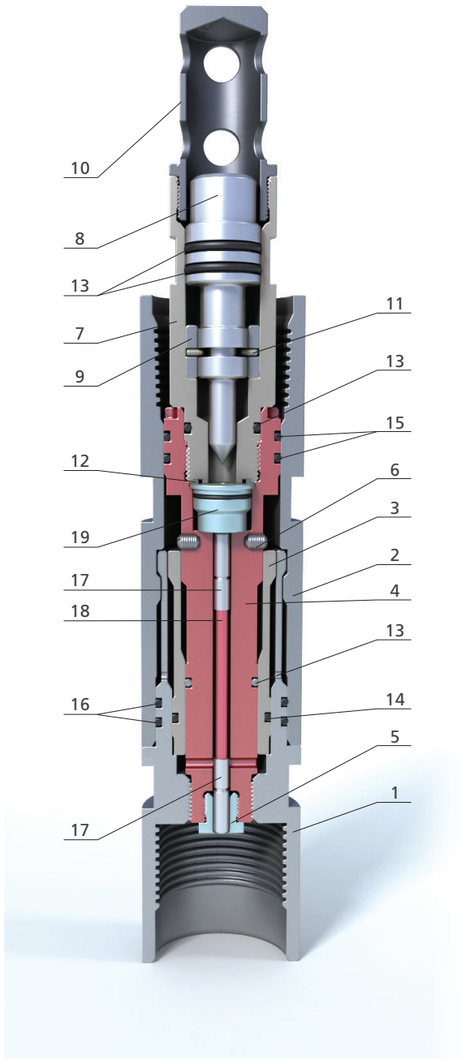


## ITEM LIST

| Item | Item Name | Part # | Qty |
|---|---|---|---|
| 1 | Sub | VGS - GSR -001 | 1 |
| 2 | Housing | VGS - GSR -002 | 1 |
| 3 | Plug | VGS - GSR -003 | 1 |
| 4 | Rod | VGS - GSR -004 | 1 |
| 5 | End plug | VGS - GSR -005 | 1 |
| 6 | Set screw | VGS - GSR -006 | 2 |
| 7 | Firing pin housing | VGS - GSR -020 | 1 |
| 8 | Firing pin | VGS - GSR -021 | 1 |
| 9 | O-ring | VGS - GSR -022 | 1 |
| 10 | End plug | VGS - GSR -023 | 1 |
| 11 | Pin | VGS - GSG -007 | 12 |
| 12 | O-ring | 021-025-25 | 1 |
| 13 | O-ring | 027-033-36 | 4 |
| 14 | O-ring | 039-045-36 | 1 |
| 15 | O-ring | 046-052-36 | 2 |
| 16 | O-ring | 054-060-36 | 2 |
| 17 | Booster | Booster ORION | 2 |
| 18 | Detonating cord [1] | | 4.5" |
| 19 | Initiator | Percussion Initiator ORION | 1 |

# ORION-06 HYDRAULIC FIRING HEAD FOR SETTING TOOL

ORION-06 Firing Head is used to activate tubing conveyed setting tool of ST ORION type by applying tubing pressure. Circulating ports of Firing Head housing allow wellbore fluid to safely circulate into the tubing through the tubing space. Using different numbers of pins Firing Head can be set to activate at predetermined pressure from 1160 to 5800 PSI.

## DESCRIPTION

| Item | Item Name | Specification<br>TG ORION-06-82 |
|---|---|---|
| 1 | Thread size and type<br>(Firing Head with ORION Setting Tool)<br>(Firing Head with expansion joint) | Tr 65x4<br>M 52x3 |
| 2 | Applicability | ST-1 ORION,<br>ST-2 ORION |
| 3 | Max hydrostatic initiation pressure, PSI<br>Max 10 pins | 5801.51 |
| 4 | Min hydrostatic initiation pressure, PSI<br>Min 2 pins | 1160.3 |
| 5 | Maximum duration on depth at max Temp [1)] | 144 hrs at 302 F |
| 6 | Perforator operation | 5 |
| 7 | Weight [2)], lb | 20.39 |
| 8 | Max OD [2)], in | 3 7/32" |
| 9 | Overall length [2)], in | 13.98 |

Note:*
1) Time is also limited by max allowed temperature of O-ring temperature resistance;
2) Following limit deviations are allowed:
- Overall dimensions, ± 2%;
- Weight, ± 3%.

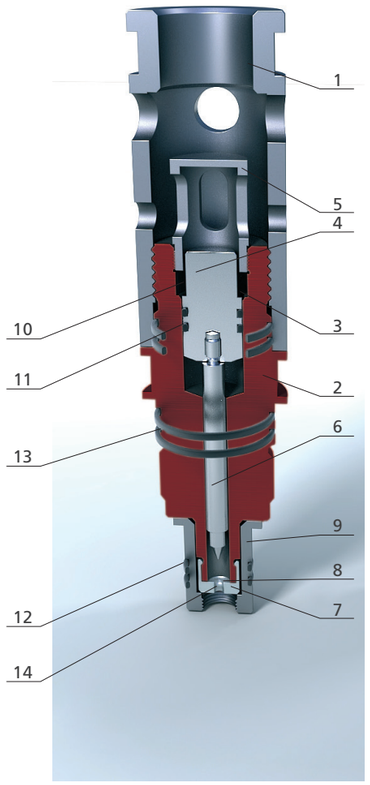


## ITEM LIST

| Item | Item Name | Part # | Qty |
|---|---|---|---|
| 1 | Housing | VGS - GIG -001 | 1 |
| 2 | Bottom sub | VGS - GIG -002 | 1 |
| 3 | Plug | VGS - GIG -004 | 1 |
| 4 | Piston | VGS - GIG -005 | 1 |
| 5 | Cup | VGS - GIG -006 | 1 |
| 6 | Firing pin | VGS - GIG -007 | 1 |
| 7 | Plug | VGS - GIG -008 | 1 |
| 8 | Nut | VGS - GIG -009 | 1 |
| 9 | Plug | VGS - GIG -010 | 1 |
| 10 | Pin | VGS - GIG -007 | 10 |
| 11 | O-ring GOST 18829-73/9833-73 | 027-033-36-2-6 | 2 |
| 12 | O-ring GOST 18829-73/9833-73 | 034-040-36-2-6 | 2 |
| 13 | O-ring GOST 18829-73/9833-73 | 060-066-36-2-6 | 4 |
| 14 | Igniter | | 1 |

# RUBEZH-ORION 11-73 ELECTRONIC HEAD WITH TIME DELAY OPERATION

RUBEZH-ORION 11-73 is used to detonate tubing conveyed perforating systems with remote control, with simultaneous recording of well pressure and temperature before, during and after initiating perforating systems.

## DESCRIPTION

| Item | Item Name | Specification |
|---|---|---|
| | | RUBEZH-ORION 11-73 |
| 1 | Thread size and type, mm | Tubing 60 GOST 633-80 |
| 2 | Gun connection | Tr65×4 |
| 3 | Applicability | PK63KL ORION,PK73KL ORION, PK89KL ORION, PK102KL |
| 4 | Max OD [2], in | 2 7/8" |
| 5 | Max hydrostatic initiation pressure, PSI | 11603,02 |
| 6 | Max temperature, F | 302 |
| 7 | Perforator operation | 10 |
| 8 | Weight [2], lb | 67,24 |
| 9 | Overall length [2], in | 62,36 |
| 10 | Downhole conditions | oil, formation fluid, water |

Note:*
1) Time is also limited by max allowed temperature of O-ring temperature resistance;
2) Following limit deviations are allowed:
- Overall dimensions, ± 2%;
- Weight, ± 3%.

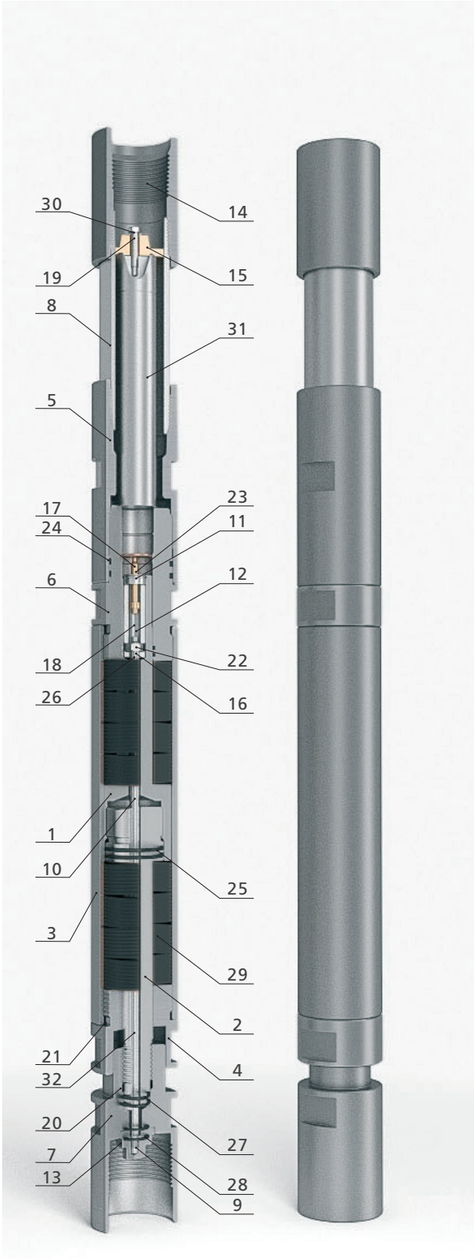


## ITEM LIST

| Item | Item Name | Part # | Qty |
|---|---|---|---|
| 1 | Upper carrier | VGS - GSE -001 | 1 |
| 2 | Bottom carrier | VGS - GSE -002 | 1 |
| 3 | Casing | VGS - GSE -003 | 1 |
| 4 | Support | VGS - GSE -004 | 1 |
| 5 | Sleeve | VGS - GSE -005 | 1 |
| 6 | Upper sub | VGS - GSE -006 | 1 |
| 7 | Bottom sub | VGS - GSE -007 | 1 |
| 8 | Plug | VGS - GSE -008 | 1 |
| 9 | Pin | VGS - GSE -008 | 1 |
| 10 | Core | VGS - GSE -010 | 1 |
| 11 | Pin | VGS - GSE -011 | 1 |
| 12 | Plug | VGS - GSE -012 | 1 |
| 13 | Thrust plug | VGS - GSE -013 | 1 |
| 14 | Sleeve M60/M60 | VGS60-NKT-006 | 1 |
| 15 | Patron plug | VGS105-01.023-01 | 1 |
| 16 | Insulating plug | VGS83-XSp-01.004 | 1 |
| 17 | Protecting plug | VGS83-XSp-01.005 | 1 |
| 18 | Spring | VGS83-XSp-01.007 | 1 |
| 19 | Hex screw GOST R ISO 4017 | M6×30-8.8 | 1 |
| 20 | Set screw GOST R ISO 4766 | M5×16-14N | 1 |
| 21 | Set screw GOST R ISO 4766 | M5×6-14N | 2 |
| 22 | Normal hex nut GOST ISO 4032 | M8-8 | 1 |
| 23 | O-ring GOST 13943 | V19 | 1 |
| 24 | O-ring GOST 18829 | 060-066-36-2-6 | 2 |
| 25 | O-ring GOST 18829 | 046-050-25-2-6 | 2 |
| 26 | O-ring GOST 18829 | 032-036-25-2-6 | 2 |
| 27 | O-ring GOST 18829 | 023-027-25-2-6 | 2 |
| 28 | O-ring GOST 18829 | 021-025-25-2-6 | 2 |
| 29 | Disc spring GOST 3057 | II-1-1-63×31,5×2,4×1,75-248 F | 80 |
| 30 | Collar GOST 11371 | A 6.01.08кп. | 1 |
| 31 | The autonomous pressure gauge with initiating device | ACM-6S(IU)-38.00.00.000 | 1 |
| 32 | Heat shrink tube | Ø10 | |

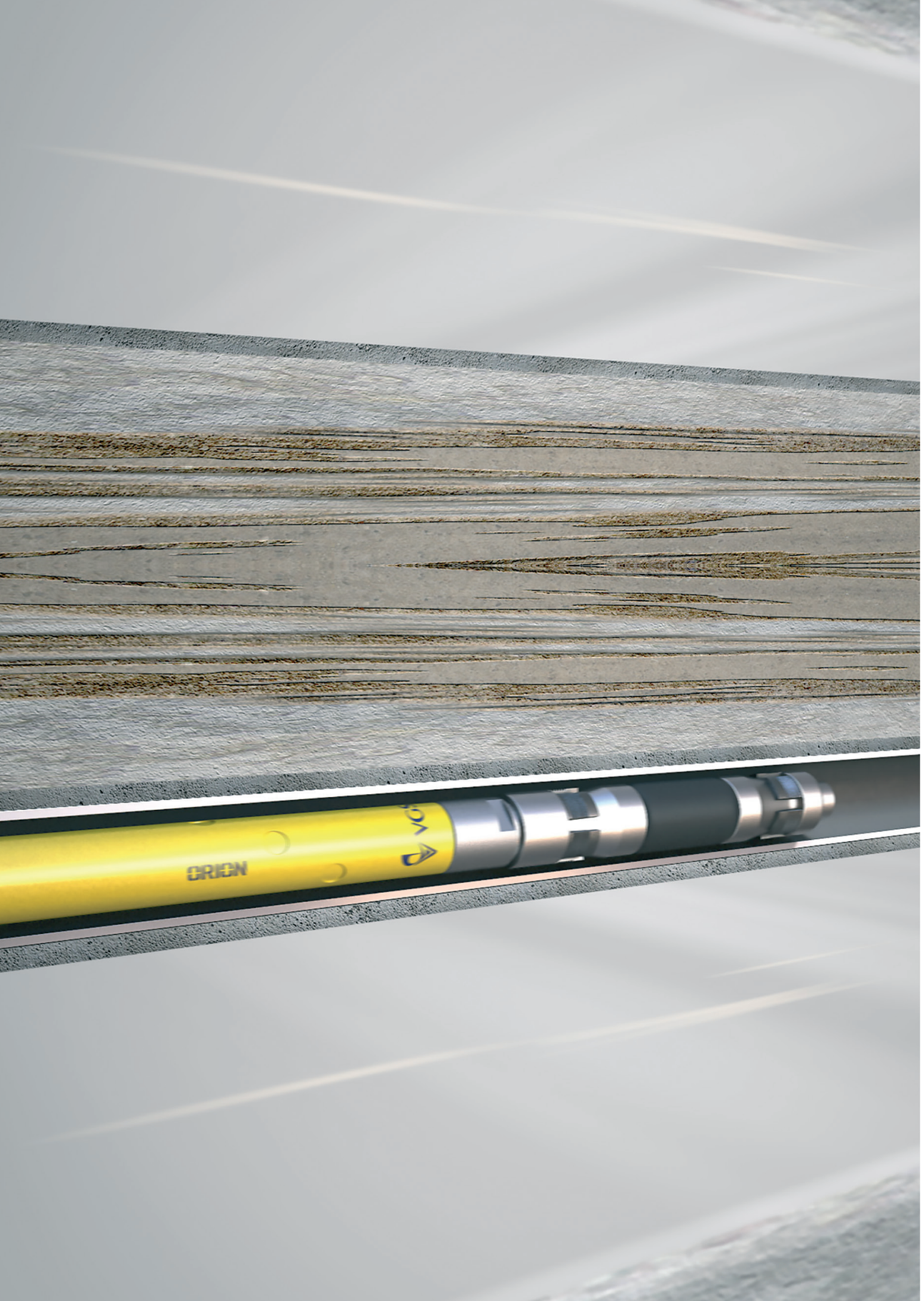


# EQUIPMENT OF VGS

- ORION SLIPS PAKER
- DRILLABLE THOUGH PLUG
- SETTING TOOL
- ORION EXPLOSIVE CEMENT DUMP BAILER

EQUIPMENT FOR PIPE RECOVERY:

- ORION TUBING CUTTER

EQUIPMENT FOR WORK PERFORMANCE ON WIRELINE:

- NKB60-3 FOR WELL GEOPHYSICAL SURVEY
- ORION-76 SLEEVE LOCATOR

EQUIPMENT FOR CASING LEAK REPAIR
CASING/TUBING PATCH TECHNOLOGIES:

- HYDRAULIC SETTING TOOL
- MULTI-STAGE SETTING TOOL
- TUBING PERFORATION TECHNOLOGIES
- PERFORATION TECHNOLOGIES FOR MULTI-STAGE HYDROFRACTURING
- TUBING PERFORATION IN HORIZONTAL WELLS

# SLIPS PACKER PSH ORION

Slips packer is used to set drillable isolation bridge in cased holes. It is used in the fluid filled wells (water, washing solution, and oil) at maximum hydrostatic pressure 22000 PSI and up to 300 F.

Isolation bridge set with Slips packer can bear a short time load of 66000-88000 lb (during 24 hours) and pressure drop 9500 Psi without additional cement grouting.

It is run on the special setting tool.

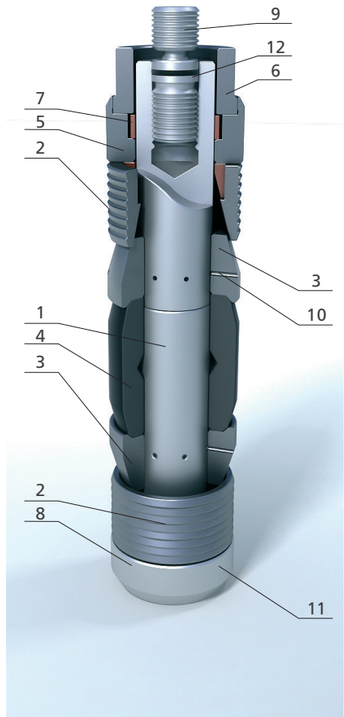


## SPECIFICATION

| Item | Description | Value for ORION Packer | | | | | | | |
|---|---|---|---|---|---|---|---|---|---|
| | | PSh 82 | PSh 88 | PSh 92 | PSh 102 | PSh 110 | PSh 118 | PSh 136 | PSh 145 |
| 1 | Packer OD, in | 3 7/32" | 3 1/2" | 3 5/8" | 4" | 4 11/32" | 4 5/8" | 5 3/8" | 5 3/4" |
| 2 | Packer length, in | 15.2 | 15.08 | 16.14 | 15.75 | 20.81 | 20.87 | 21.45 | 21.45 |
| 3 | Packer weight, lb | 14.55 | 18.08 | 20.59 | 24.25 | 39.68 | 41.89 | 56 | 65.04 |
| 4 | Casing ID, in<br>- min;<br>- max | 3 7/16"<br>3 7/8" | 3.78"<br>4.09" | 4 15/16"<br>4 11/32" | 4 9/32"<br>4 7/8" | 4 9/16"<br>4 15/16" | 4 7/8"<br>5 1/4" | 5 1/8"<br>6" | 6 9/64"<br>6 1/2" |
| 5 | Maximum duration on depth at max Temp | 3 hrs at 300 F | | | | | | | |
| 6 | Downhole conditions | oil, formation fluid, water | | | | | | | |

Note:
Following limit deviations are allowed:
- Overall dimensions, ± 2%;
- Weight,± 3%

## ITEM LIST

| Item | Item Name | Part # | Qty |
|---|---|---|---|
| 1 | Rod | | 1 |
| 2 | Friction block (drag shoe) | | 2 |
| 3 | Cone | | 2 |
| 4 | Packer sealing cup | | 1 |
| 5 | Holder | | 1 |
| 6 | Stop ring | | 1 |
| 7 | Lock nut | | 1 |
| 8 | Cap | | 1 |
| 9 | Screw rod | | 1 |
| 10 | Pin 5x32 | | 13 |
| 11 | Set screw GOST R ISO 4766-M6x16-14H | | 1 |
| 12 | O-ring GOST 18829-73 | 034-040-36-2-6 | 1 |

# DRILLABLE THOUGH PLUG

PPR PRORION drillable through plug assembled with soluble balloon is intended for temporary hermetic separation of reservoir intervals of oil and gas wells during hydraulic fracturing.

Drillable through plug provides the maximum possible bore diameter after installation in the casing.

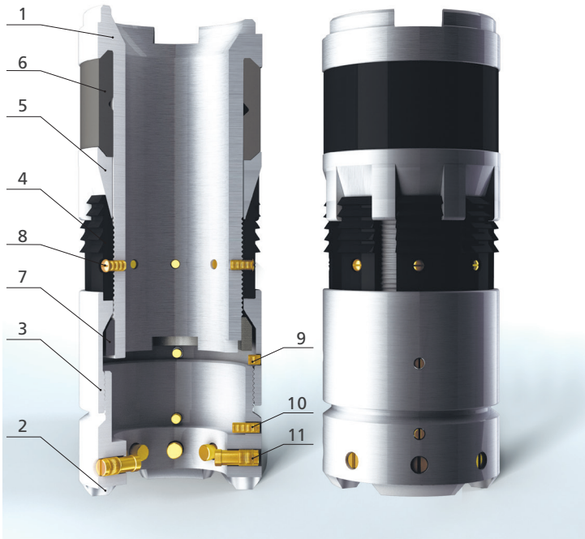


## ITEM LIST

| Item | Item Name | Qty |
|---|---|---|
| 1 | Rod | 1 |
| 2 | Carrier | 1 |
| 3 | Holder | 1 |
| 4 | Friction block (drag shoe) | 8 |
| 5 | Cone | 1 |
| 6 | Sealing sleeve | 1 |
| 7 | Lock nut | 1 |
| 8 | Screw | 8 |
| 9 | Screw | 4 |
| 10 | Set screw | 4 |
| 11 | Cut off screw | 8 |

## SPECIFICATION

| Item | Feature | Value | | | | | | | | |
|---|---|---|---|---|---|---|---|---|---|---|
| | | PPR PRORION 82 | PPR PRORION 88 | PPR PRORION 95 | PPR PRORION 102 | PPR PRORION 110 | PPR PRORION 115 | PPR PRORION 118 | PPR PRORION 135 | PPR PRORION 146 |
| 1 | Max OD*, in | 3 7/32" | 3 1/2" | 3 3/4" | 4" | 4 11/32" | 4 17/32" | 4 5/8" | 5 11/32" | 5 3/4" |
| 2 | Min ID*, in | 2" | 2" | 2 3/8" | 2 3/8" | 2 3/8" | 2 25/32" | 2 25/32" | 3 9/16" | 3 3/4" |
| 3 | Overall length, in [2)] | 10,63 | 10,63 | 11,42 | 12,6 | 12,99 | 13,78 | 14,17 | 15,75 | 17,72 |
| 4 | Weight, lb | 5,73 | 5,73 | 6,61 | 8,82 | 10,8 | 12,13 | 13,23 | 17,64 | 22,05 |
| 5 | Maximum duration on depth at max Temp | 1 year since installation, not more than 3 hours at 302 F and pressure 10152,64 PSI | | | | | | | | |
| 6 | Diameter of soluble balloon, in | 2 1/4" | 2 1/4" | 2 5/8" | 2 5/8" | 2 5/8" | 3 5/32" | 3" | 3 3/4" | 4" |
| 7 | Installation in casing, in | 4 1/2" x 0 13/32" | 4 1/2" x 0 11/32" | 4 1/2" x 0 1/4" | 5" x 0 5/16" | 5 17/32" x 0 5/16" | 5 17/32" x 0 5/16" | 5 3/4" x 0 5/16" | 6 5/8" x 0 11/32" | 7 1/64" x 0 3/8" |
| 8 | Downhole conditions | oil, formation fluid, water | | | | | | | | |
| 9 | Service life, shots | single application | | | | | | | | |

Note:
Following limit deviations are allowed:
- Overall dimensions, ± 2% according to the Design documentation;
- Weight,± 3%

# SETTING TOOL

VGS IP1-100, VGS IP2-100 setting tool is intended for mounting Isolation bridge plugs, pakers and Casing/Tubing patches setup, etc.

Setting tool refers to the repair and insulation equipment. It is used for multiple application on wireline or in casing.

Setting tool is used in the fluid filled wells (water, washing solution, and oil) at maximum hydrostatic pressure 21755,66 PSI and up to 300 F.

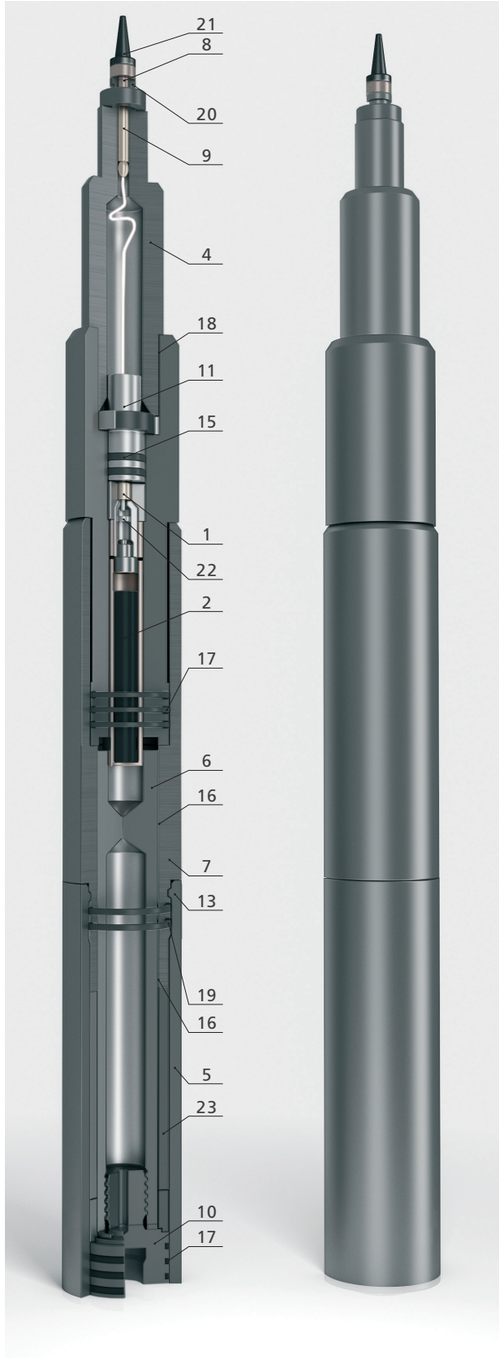


## ITEM LIST

| Item | Item Name | Part # | | Qty |
|---|---|---|---|---|
| | | VGS IP1-100 | VGS IP2-100 | |
| 1 | Bottom electrical connector | VGS-IP2-010 | | 1 |
| 5 | Carrier | VGS-IP1-101 | VGS-IP2-101 | 1 |
| 6 | Core | VGS-IP1-102 | VGS-IP2-102 | 1 |
| 7 | Sub | VGS-IP1-105 | VGS-IP2-105 | 1 |
| 4 | Head | VGS73-01.002 | | 1 |
| 10 | Perforating sub | VGS-IP1-003 | VGS-IP2-003 | 1 |
| 11 | End plug | VGS-IP2-004 | | 1 |
| 12 | Set screw | GOST R ISO 4766-M3x5-14N | | 1 |
| 14 | | GOST R ISO 4766-M6x14-14N | GOST R ISO 4766-M6x16-14N | 1 |
| 13 | | GOST R ISO 4766-M8x14-14N | GOST R ISO 4766-M6x10-14N | 2 |
| 8 | Electrical connector | VGS89-01.015 | | 1 |
| 9 | Electrical connector core | VGS89-01.015-01 | | 1 |
| 21 | Seal | KG 60-3-6 | | 1 |
| 20 | Plug-in connector | KG 60-3-7 | | 1 |
| 15 | GOST 18829-73 | O-ring 032-040-46-2-6 | | 2 |
| 16 | GOST 18829-73 | O-ring 045-053-46-2-6 | O-ring 053-063-58-2-6 | 3 |
| 18 | GOST 18829-73 | O-ring 060-066-36-2-6 | | 2 |
| 17 | GOST 18829-73 | O-ring 055-063-46-2-6 | O-ring 070-080-58-2-6 | 6 |
| 19 | GOST 18829-73 | O-ring 079-085-36-2-6 | O-ring 079-085-36-2-6 | 2 |
| 22 | Blasting cartridge | PPT-230 TU84-971-83 | | 1 |
| 2 | Igniter | SHC 34 ORION STO 57783950-008-2014 | | 1 |

## SPECIFICATION

| № | Feature | | Value | | | |
|---|---|---|---|---|---|---|
| | | | VGS IP1-000 | VGS IP2-000 | VGS IP1-100 | VGS IP2-100 |
| 1 | Max OD*, in | | 3 7/32" [1] | 4" [1] | 3 7/32" [1] | 4" [1] |
| 2 | Min ID*, in | | 3 1/2" | 4 5/16" | 3 1/2" | 4 5/16" |
| 3 | Max allowed hydrostatic pressure, PSI | | 21755,66 | | | |
| 4 | Min allowed hydrostatic pressure, PSI | | 14,5 | | | |
| 5 | Maximum duration on depth at max Temp. | | not more than 24 hours at 302F | | | |
| 6 | Overall length, in | | 38,19 [1] | 39,76 [1] | 39,76 [1] | 39,76 [1] |
| 7 | Weight, lb | | 58,64 [1] | 110,01 [1] | 60,63 [1] | 110,01 [1] |
| 8 | Tool performance | - Installation on wireline | initiation from an electrical source | | | |
| | | - Installation in casing | initiator GS ORION-06-82 | | | |
| 9 | Charge | | Blasting cartridge BGS SHC-34 ORION | | | |
| 10 | Initiator | Blasting cartridge | PPT-230 TU84-971-83 | | | |
| | | capsule-Igniter | KV-N-11 TU84-601-103-86 (DISHV.773911.501 TU) | | | |
| 11 | Service life, shots | | 5 | | 15 | |

Note:
Following limit deviations are allowed:
- Overall dimensions, ± 2%;
- Weight,± 3%

# ORION EXPLOSIVE CEMENT DUMP BAILER

Explosive cementing dump bailer is designed to spot cement slurry at the plugback depth of the well.

An explosive cementing bailer is used to set a cement isolation bridge in a cased hole on a pre-set packer or a plugback depth.

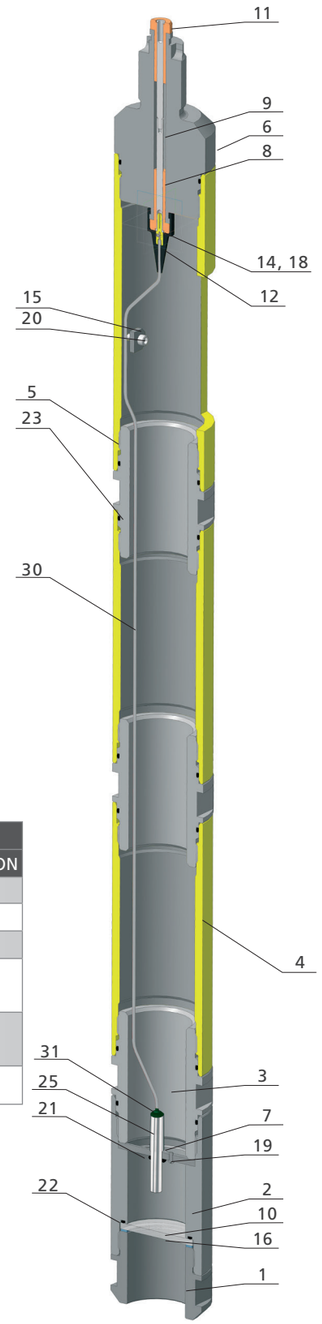


## SPECIFICATION

| № | Feature | Specification | | |
|---|---|---|---|---|
| | | ZhTsV 73 ORION | ZhTsV 89 ORION | ZhTsV 102 ORION |
| 1 | OD, in | 3 1/2" | 4 1/4" | 4 2/3" |
| 2 | Length (to cable head), in | 371.65 | 371.65 | 371.65 |
| 3 | Volume, bbls | 0.16 | 0.24 | 0.31 |
| 4 | Weight (without cement slurry), lb | 229.28 | 308.64 | 385.81 |
| 5 | Max angle of well inclination , degree | 40 | | |
| 6 | Service life, shots | 10 | | |

Note:
Following limit deviations are allowed:
- Overall dimensions, ± 2%;
- Weight,± 3%

## ITEM LIST

| Item | Item List | Part # | | | Qty |
|---|---|---|---|---|---|
| 1 | Cap | ZhTsV 73-001 | ZhTsV 89-001 | ZhTsV 102-001 | 1 |
| 2 | Spacer | ZhTsV 73-002 | ZhTsV 89-002 | ZhTsV 102-002 | 1 |
| 3 | Adapter | ZhTsV 73-003 | ZhTsV 89-003 | ZhTsV 102-003 | 3 |
| 4 | Body | ZhTsV 73-004 | ZhTsV 89-004 | ZhTsV 102-004 | 2 |
| 5 | Body | ZhTsV 73-005 | ZhTsV 89-005 | ZhTsV 102-005 | 1 |
| 6 | Head | ZhTsV 73-006 | ZhTsV 89-006 | ZhTsV 102-006 | 1 |
| 7 | Collar | ZhTsV 73-007 | ZhTsV 89-007 | ZhTsV 102-007 | 1 |
| 8 | Electrical connector | ZhTsV 89-008 | ZhTsV 89-008 | ZhTsV 89-008 | 1 |
| 9 | Electrical connector | ZhTsV 89-009 | ZhTsV 89-009 | ZhTsV 89-009 | 1 |
| 10 | DIsk | ZhTsV 73-010 | ZhTsV 89-010 | ZhTsV 102-010 | 1 |
| 11 | Electrical connector core | ZhTsV 89-01.015 | ZhTsV 89-01.015 | ZhTsV 89-01.015 | 2 |
| 12 | Sealing | KG60-3-6 | KG60-3-6 | KG60-3-6 | 1 |
| 14 | Contact | KG60-3-7 | KG60-3-7 | KG60-3-7 | 1 |
| 15 | Locking device | ZhTsV 73-011 | ZhTsV 89-011 | ZhTsV 89 -011 | 1 |
| 16 | Seal | ZhTsV 73-012 | ZhTsV 89-012 | - | 1 |
| 17 | Seal G-50-6,3-PON-B-GOST 15180-86 | - | - | • | 1 |
| 18 | Set screw GOST R ISO 4766-M3x5-14H | • | • | • | 1 |
| 19 | Screw A.M4-6g x 8.05 GOST 17473-80 | • | • | • | 1 |
| 20 | Set screw with hexagonal recess for wrench GOST R ISO 4026-M6x20-45H | • | - | - | 2 |
| 20 | Set screw with cylindrical head and hexagonal recess for wrench GOST R ISO 4762-M6x20-12,9 | - | • | - | 2 |
| 20 | Set screw with cylindrical head and hexagonal recess for wrench GOST R ISO 4762-M6x20-8,8 | - | - | • | 2 |
| 21 | O-ring GOST 18829-73/9833-73 | 011-016-30-2-6 | 011-016-30-2-6 | 011-016-30-2-6 | 1 |
| 22 | | 049-055-36-2-6 | 065-071-36-2-6 | 074-080-36-2-6 | 1 |
| 23 | | 060-066-36-2-6 | 076-082-36-2-6 | 086-092-36-2-6 | 7 |
| 25 | Leakproof firing cartridge PGN-150 TU 84-95 DShV.773955.504 | • | • | • | 1 |
| 30 | Cord KG1x1,5-55-150 TU 3585-001-91988690-2011 | • | • | • | |
| 31 | Electric tape 15x0,20, blue, 1 POL GOST 16214-86 | • | • | • | |

# EQUIPMENT PIPE RECOVERY ORION TUBING CUTTER

ORION Tubing cutter is used to cut the tubing in plain normal cross section with its slight damage and without any damage to the casing.

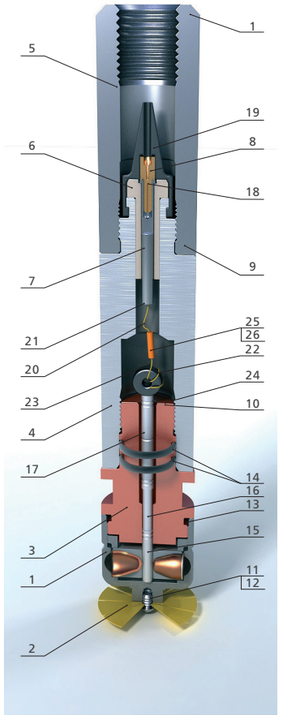


## GENERAL QUANTITIES AND PROPERTIES OF TUBING CUTTER

| Description | | Specification | | | | | | | | |
|---|---|---|---|---|---|---|---|---|---|---|
| | | TK45 ORION | TK55 ORION | TK68 ORION | TK85 ORION | TK90 ORION | TK110 ORION | TK118 ORION | TK135 ORION | TK146 ORION |
| Max allowed hydrostatic pressure, PSI | | 11603 | | | | | | | | |
| Maximum duration on depth at max Temp [1] | RDX | 24 hours at 302F | | | | | | | | |
| | HMX | 24 hours at 338F | | | | | | | | |
| | HNS | 24 hours at 455F | | | | | | | | |
| Tubing cutter OD, in | | 1 3/4" | 2 5/32" | 2 11/16" | 3 11/32" | 3 1/2" | 4 11/32" | 4 5/8" | 5 5/16" | 5 3/4" |
| OD (nominal)of the tube to cut | tubing | 2 3/8" | 2 7/8" | 3 1/2" | 4" | 4 1/2" | 5" | - | - | - |
| | casing | - | - | - | 4" | 4 1/2" | 5" | 5 3/4" | 6 5/8" | 7" |
| Wall thickness of cutting tube, in, no more than | | 0.196 | 0.216 | 0.256 | 0.257 | 0.257 | 0.257 | 0.315 | 0.354 | 0.393 |
| Tubing cutter length without loading, in [2] | | 11,81 | 13.86 | | | | | | | |
| Tubing cutter length with loading , in [2] | | 45.75 | 45944 | | | | | | | |
| Tubing cutter weight without loading, lb [2] | | 4.41 | 11.9 | | | | | | | |
| Weight loaded, lb [2] | | 20.77 | 20.77 | | | | | | | |

Note:
1) depending on the type of explosive used in the tubing cutter charge. Also the time is limited by max allowed heat resistance of O-rings used in tubing cutters;
2) Following limit deviations are allowed:
- Overall dimensions, ± 2%;
- Weight,± 3%

## ITEM LIST

| Item | Description | Part # | Qty |
|---|---|---|---|
| 1 | Tubing cutter charge ZTK 55 ORION | ORION 3TK-55.01.000 | 1 |
| 2 | Centralizer | VGS55 - TK -00.001 | 1 |
| 3 | Adapter | VGS55 - TK -00.002 | 1 |
| 4 | Body | VGS55 - TK -00.003 | 1 |
| 5 | Sleeve | VGS55 - TK -00.004 | 1 |
| 6 | Electrical connector | VGS89 - 01.015 | 1 |
| 7 | Electrical connector core | VGS89 - 01.015-01 | 1 |
| 8 | Set screw GOST R ISO 4766-M3x5-14H | | 1 |
| 9 | Set screw GOST R ISO 4766-M6x8-14H | | 2 |
| 10 | Flat head screw GOST R ISO 1580-M4x8-4.8 | | 1 |
| 11 | Flat head screw GOST R ISO 1580-M6x8-4.8 | | 1 |
| 12 | Washer C 6.02.3 ГОСТ 6958-78 | | 1 |
| 13 | O-ring 040-046-36-2-6 GOST 18829-73 | | 1 |
| 14 | O-ring 027-033-36-2-6 GOST 18829-73 | | 2 |
| 15 | Detonation intensifier Booster ORION-6 STO 57783950-003-2012 | | 1 |
| 16 | Detonating Cord: Dynawell Hexacord T150 RDX TD Z801-24 1_=65±5mm | | |
| 17 | Firing cartridge PVPD-N TU 3-DShV.773955.501TU-92 | | 1 |
| 18 | Contact | KG 60-3-7 | 1 |
| 19 | Sealing | KG 60-3-6 | 1 |
| 20 | Cord PRKA 1x0,75 TU 16-505.317-76 1_=200±5mm | | |
| 21 | Electric tape 1 POL-20 GOST 2162-97 1_=85±10mm | | |
| 22 | Cord PEV-2-0,71 GOST 7262-78 1_=250±10mm | | |
| 23 | Heat shrink tube 01,5 - 02 1_=50±5mm | | |
| 24 | Isolated end sub NKI 1,5-4 red | | 1 |
| | Isolated plug-in connector | | |
| 25 | RshIp 1,5-4 red | | 1 |
| 26 | RshIp 1,5-4 red | | 1 |

# NKB60-3 FOR WELL GEOPHYSICAL SURVEY

NKB60-3 is intended to ensure mechanical and electrical watertight connection with geophysical devices. It is used with armoured single -, and three-core wireline cable.

NKB60-3 is used for well geophisical survey.

## ITEM LIST

| Item | Item Name | Part # |
|---|---|---|
| 1 | Panel board | 1 |
| 2 | Cup | 1 |
| 3 | Carrier | 1 |
| 4 | Suspension | 1 |
| 5 | Core | 1 |
| 6 | Big cone | 1 |
| 7 | Small cone | 1 |
| 8 | Spring | 1 |
| 9 | Cut off screw | 4 |
| 10 | Nut | 1 |
| 11 | Plug | 1 |
| 12 | Seal | 1 |
| 15 | Set screw GOST R ISO 4766-M6x5-A1-12N | 1 |
| 16 | O-ring 032-040-46-2-6 GOST 18829-73 | 1 |
| 20 | Screw DIN912-M6x6-10,9-Zn | 2 |
| 21 | Unit socket (Penny 3-60) assembled with contacts 137.141.011 | 1 |
| 22 | NKB plug assembled with rubber seal 137.121.024 | 3 |
| 25 | Insulating lubricant TOMFLON EP 230 TU 0254-023-12435252-04 | 0,14 |

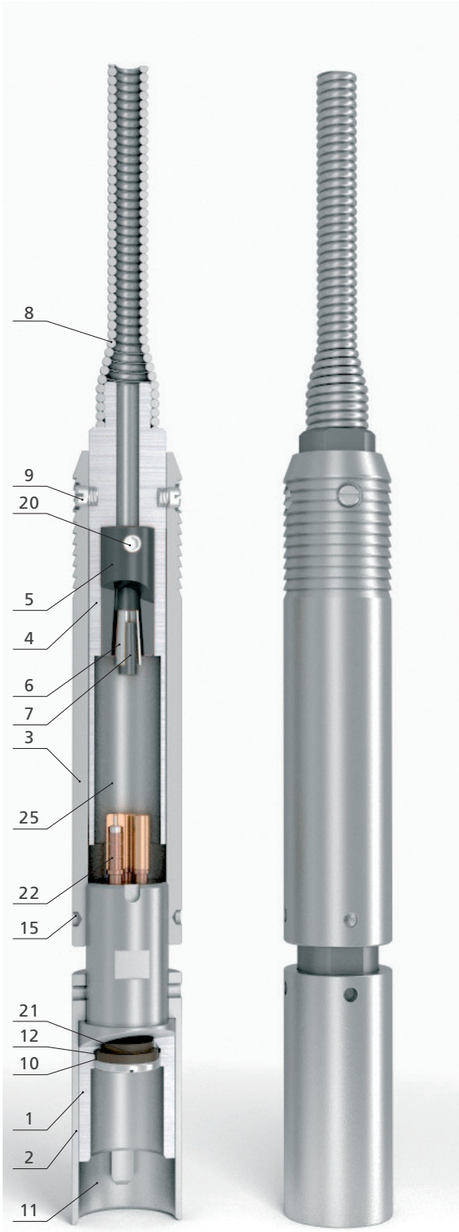


## SPECIFICATION

| Item | Feature | Value | | | | | |
|---|---|---|---|---|---|---|---|
| | | VGS60-NKB-30.000 | VGS60-NKB-30.000-01 | VGS60-NKB-30.000-02 | VGS60-NKB-30.000-03 | VGS60-NKB-30.000-04 | VGS60-NKB-30.000-05 |
| 1 | Thread size and type (connection of NKB60-3 with equipment) | M55x2 | | | | | |
| 2 | Applicability | Equipment for work performance on wireline | | | | | |
| 3 | Max allowed hydrostatic pressure, PSI | 20305,28 | | | | | |
| 4 | Max temperature, F [1] | up to 248 | | | | | |
| 5 | Insulation resistance of electrical circuits relative itself and carrier, not more than MOm | 50 | | | | | |
| 6 | Weight loaded, lb [2] | 16,53 | | | | | |
| 7 | Max OD [3], in | 2 3/8" | | | | | |
| 8 | Overall length, in [3] | 25,71 | | | | | |
| 9 | Force for screw cut off | 4 | 5 | 6 | 7 | 8 | 10 |

Note:

1) Max allowed temperature is limited with application of rubber products in NKB60-3;
2) Without weight of insulating lubricant TOMFLON EP 230 [6];
3) Overall dimensions limit deviations are allowed according to the Design documentation.

# ORION-76 SLEEVE LOCATOR

ORION-76 sleeve locator is intended to indicate couplings, to control perforated intervals and to determine intervals of shots in the casing.

ORION-76 sleeve locator is used in vertical, directional and horizontal wells to determine coupling casing for the purpose of mutual binding of geophysical surveys of wells materials in depth.

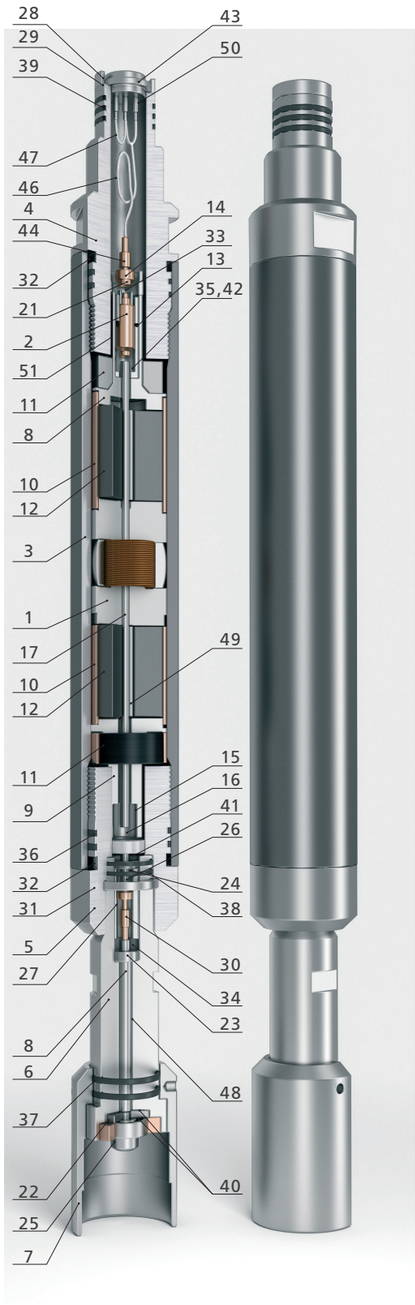


## SPECIFICATION

| Item | Feature | Value |
|---|---|---|
| | | LM ORION-76 |
| 1 | Threaded connection with NKB 60-3 | Tr55x2 |
| 2 | Threaded connection with PK | Tr65x4 |
| 3 | Max OD*, in | 3" |
| 4 | Max allowed hydrostatic pressure, PSI | 14503,77 |
| 5 | Max temperature, F [2)] | 302 |
| 6 | Service life, not more shots | 50 |
| 7 | Service life, not more years | 5 |
| 8 | Weight [1)], lb. | 39,68 |
| 9 | Overall length [1)], in. | 31,34 |
| 10 | Downhole conditions | oil, formation fluid, water |

Note:
Following limit deviations are allowed:
- Overall dimensions, ± 2%;
- Weight,± 3%

## ITEM LIST

| Item | Item Name | Part # | Qty |
|---|---|---|---|
| 1 | Coil | VGS - LM -01.000 | 1 |
| 2 | Contact interrupter | VGS - LM -02.000 | 1 |
| 3 | Carrier | VGS - LM - 00.001 | 1 |
| 4 | Head | VGS - LM - 00.002 | 1 |
| 5 | Cap | VGS - LM - 00.003 | 1 |
| 6 | Sub | VGS - LM - 00.004 | 1 |
| 7 | Cup | VGS - LM - 00.005 | 1 |
| 8 | Upper cap | VGS - LM - 00.006 | 1 |
| 9 | Bottom cap | VGS - LM - 00.007 | 1 |
| 10 | Magnet housing | VGS - LM - 00.008 | 2 |
| 11 | Absorber | VGS - LM - 00.009 | 2 |
| 12 | Permanent magnet | ВГС - ЛМ - 00.010 | 2 |
| 13 | Upper insulator | VGS - LM - 00.011 | 1 |
| 14 | Upper plug-in connector | VGS - LM - 00.012 | 1 |
| 15 | Bottom insulator | VGS - LM - 00.013 | 1 |
| 16 | Bottom plug-in connector | VGS - LM - 00.014 | 1 |
| 17 | Upper core | VGS - LM - 00.015 | 1 |
| 18 | Bottom core | VGS - LM - 00.016 | 1 |
| 21 | Spring | VGS - LM - 00.020 | 2 |
| 22 | Patron plug | VGS - LM - 00.021 | 1 |
| 23 | Insulating plug | VGS - LM - 00.022 | 1 |
| 24 | Protecting plug | VGS - LM - 00.023 | 1 |
| 25 | Pin | VGS - GSE - 009 | 1 |
| 26 | Pin | VGS - GSE - 011 | 1 |
| 27 | Plug | VGS - GSE - 012 | 1 |
| 28 | Nut | VGS60-NKB-03.010 | 1 |
| 29 | Seal | VGS60-NKB-03.012 | 1 |
| 30 | Spring | VGS83-XSp-01.007 | 1 |
| 31 | Set screw GOST R ISO 4766 | M5×20-14N | 1 |
| 32 | Set screw GOST R ISO 4766 | M5×8-14N | 2 |
| 33 | Screw with flat head GOST R ISO 1580 | M4×5-4.8 | 2 |
| 34 | Hex screw GOST R ISO 4032 | M8-8 | 1 |
| 35 | Hex screw GOST R ISO 4032 | M5-8 | 1 |
| 36 | O-ring GOST 18829 | 060-066-36-2-6 | 4 |
| 37 | O-ring GOST 18829 | 044-050-36-2-6 | 2 |
| 38 | O-ring GOST 18829 | 037-041-25-2 | 2 |
| 39 | O-ring GOST 18829 | 036-040-25-2 | 3 |
| 40 | O-ring GOST 18829 | 021-025-25-2 | 2 |
| 41 | O-ring GOST 13943 | B19 | 1 |
| 42 | Collar GOST 11371 | A 5.01.08kp. | 1 |
| 43 | Unit socket (Penny 3-60) assembled with contacts | 137.141.011 | 1 |
| 44 | Red insulated plug-in connector | RshIm 1,5-4 | 1 |
| 45 | Rubber seal 3826 ТУ 38 1051180-91 | Ø52x5,3 | 1 |
| 46 | Cord TU 16-505.317-76 L=0,2 м | PRKA 1x0,75 | 1 |
| 47 | Cord TU 16-505.317-76 L=0,06 м | PRKA 1x0,75 | 2 |
| 48 | Heat shrink tube L=0,11 м | Ø10 | 1 |
| 49 | Heat shrink tube L=0,305 м | Ø6 | 1 |
| 50 | Heat shrink tube L=0,015 м | Ø4 | 3 |
| 51 | Heat resistant fiberglass tape L=1 м | 0,13x13 | 1 |

# EQUIPMENT FOR CASING LEAK REPAIR

## CASING/TUBING PATCH TECHNOLOGIES

To restore parted 4 1/2"-7" casings of old non-operating well inventory VGS offers Casing/Tubing Patch Technologies.

**Technology allows:**

- To restore casing integrity with long interval of damage;
- To restore tubing and casing integrity;
- To connect broken and destroyed parts of casings;
- To isolate watered layers.

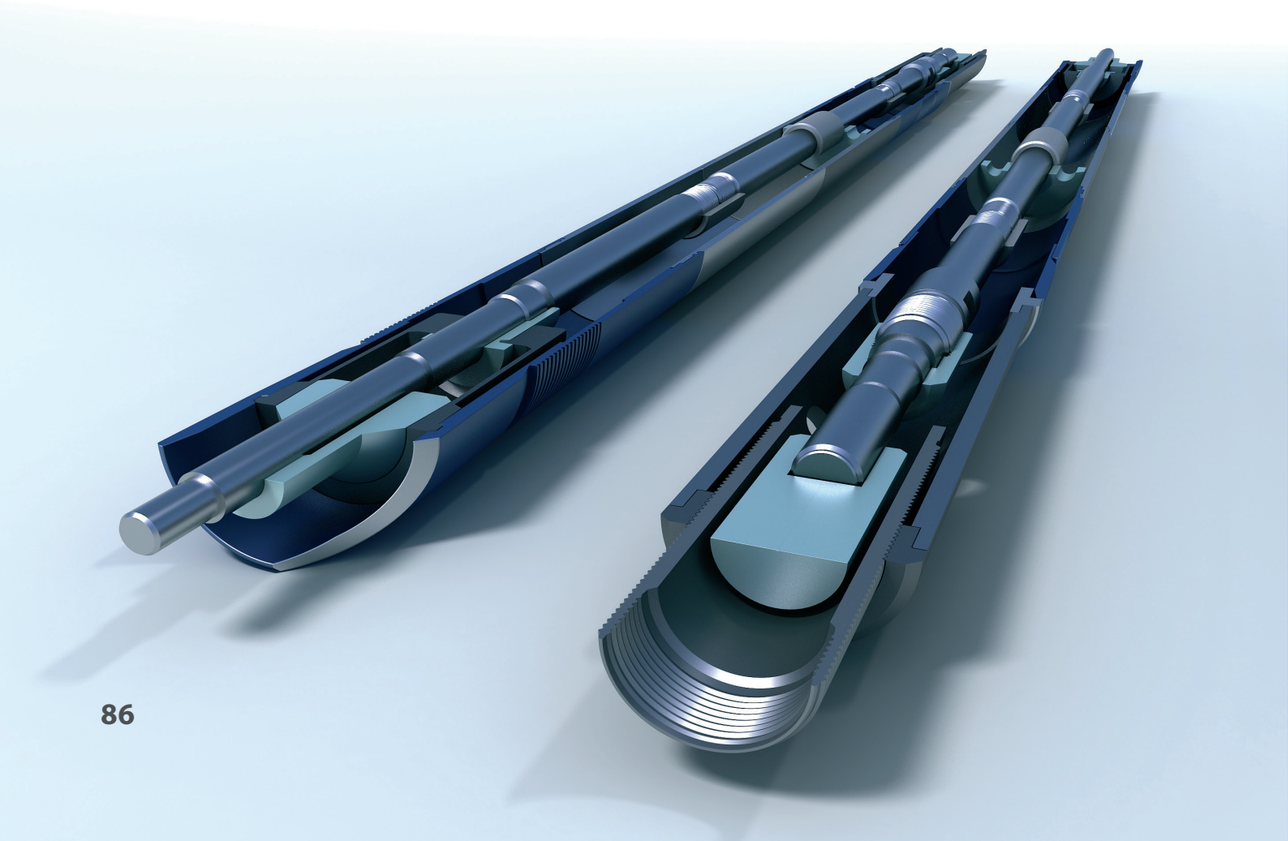

**Technology advantages:**

- Service life of the system is commensurable with the service life of a well;
- Provides min narrowing of a casing ID;
- It is a removable system;
- Saves time and cost of isolation jobs on casing leak repair;
- Reduces input of materials during casing leak repair compared with the same methods.

**CASING/TUBING PATCH SPECIFICATION**

| Description | Value | | | |
|---|---|---|---|---|
| Casing O.D. in | 4 1/2" | 6 5/8" | 6 5/8" | 7" |
| Casing I.D. maximum in | 4.05 | 5.201 | 6.056 | 6.367 |
| Casing I.D. minimum in | 3.92 | 5.087 | 5.938 | 6.280 |
| Patch max. Running O.D. in | 3.776 | 4.790 | 5.766 | 6.110 |
| Patch I.D. after setting in. | 3.375 | 4.250 | 5.250 | 5.440 |
| Collapse hydraulic rating psi. | 7500 | 4830 | 3500 | 3180 |
| Burst hydraulic rating psi. | 5700 | 4480 | 4400 | 3970 |

## HYDRAULIC SETTING TOOL

Hydraulic Setting Tool is used to set the Casing Patches through tubing in a casing leak zone. It is actuated hydraulically by applying working pressure on the well head with high pressure unit.

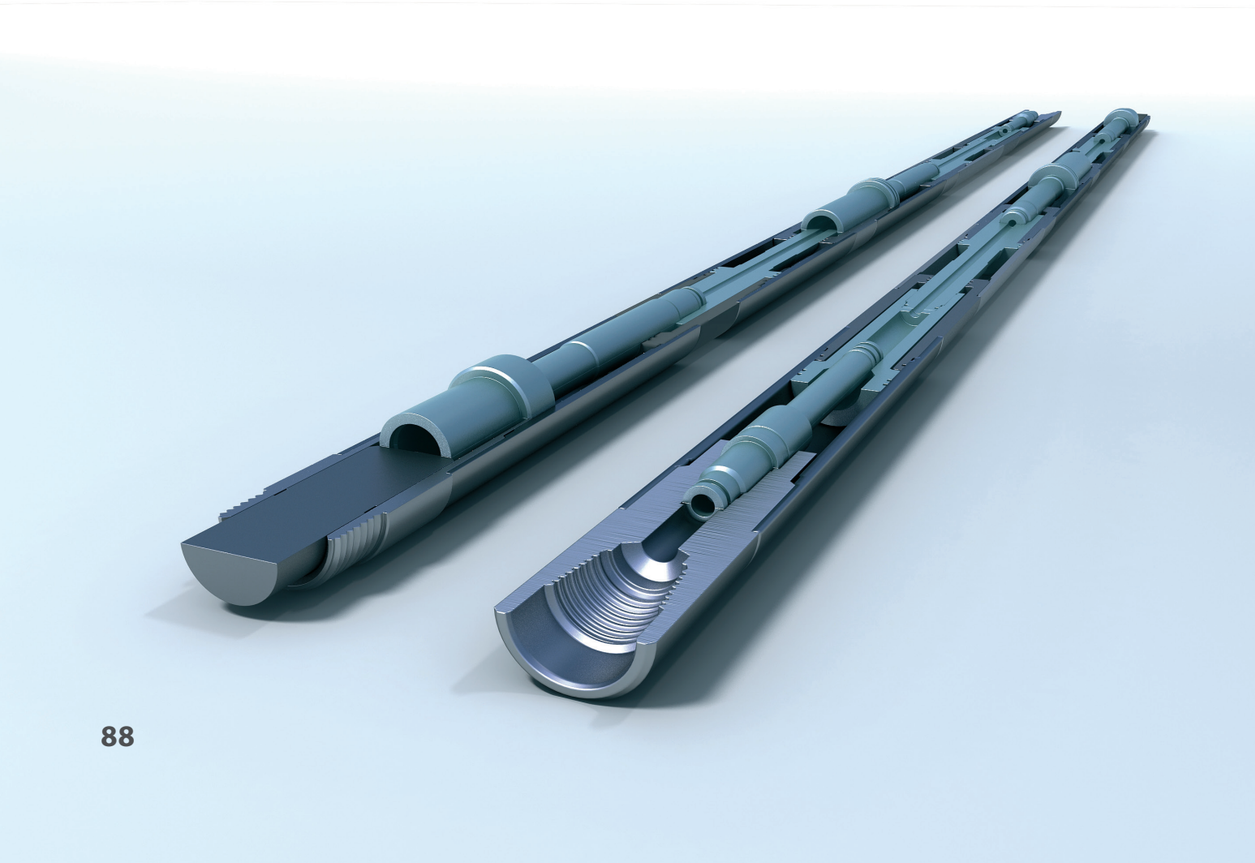



## MULTI-STAGE SETTING TOOL

Multi-Stage Setting Tool is a wireline pressure setting tool which is used to set Casing/Tubing Patches in a casing leak zone. It is actuated electrically from the hoist of a well logging unit.

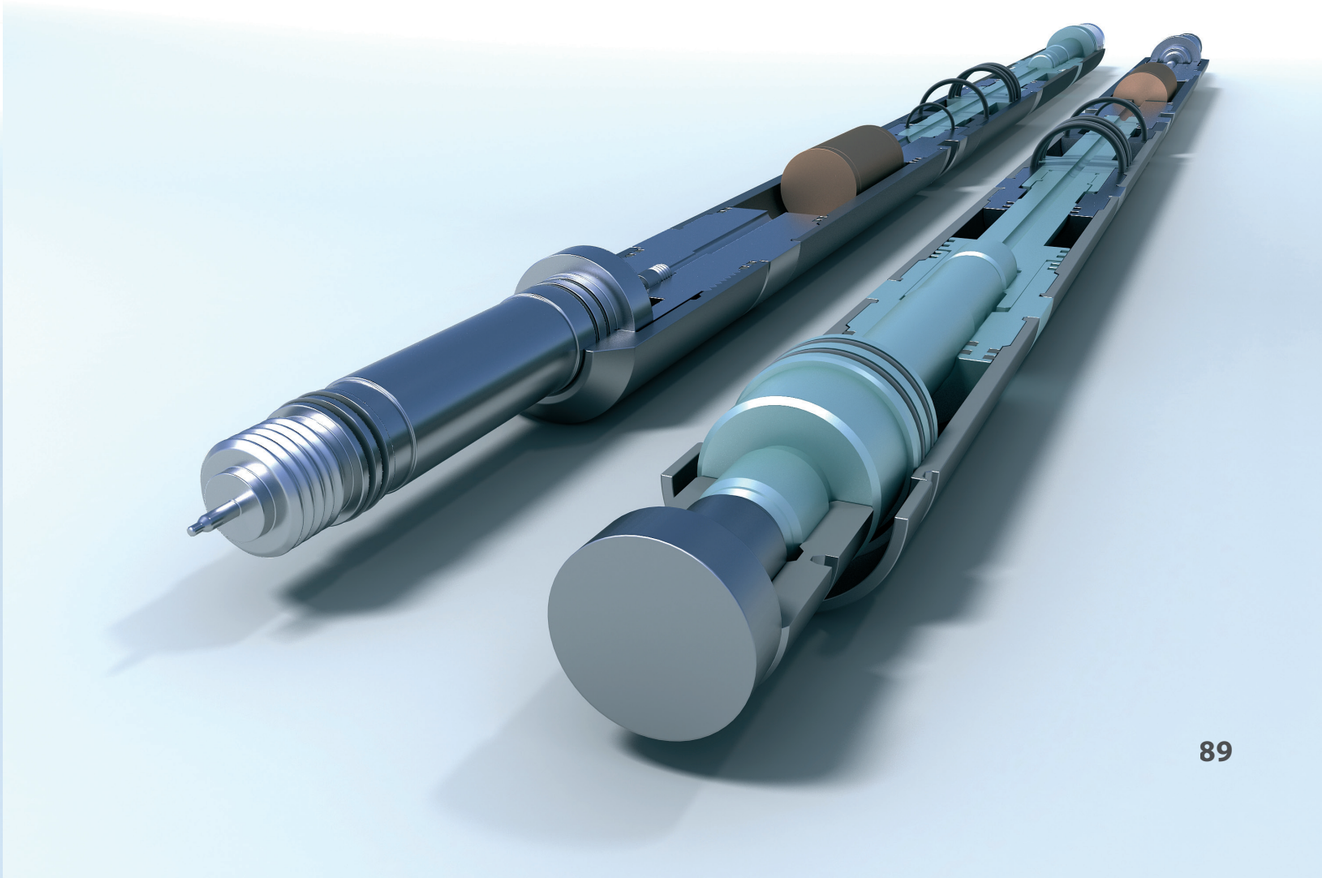

## TUBING PERFORATION TECHNOLOGIES

- Possibility of creating required and controlled pressure drawdown;
- Use of the Mechanical Firing Head with further release of the perforator from transport hanger slips to initiate perforating systems;
- Use of the technology in deviated wells with deviation angle of 60°.

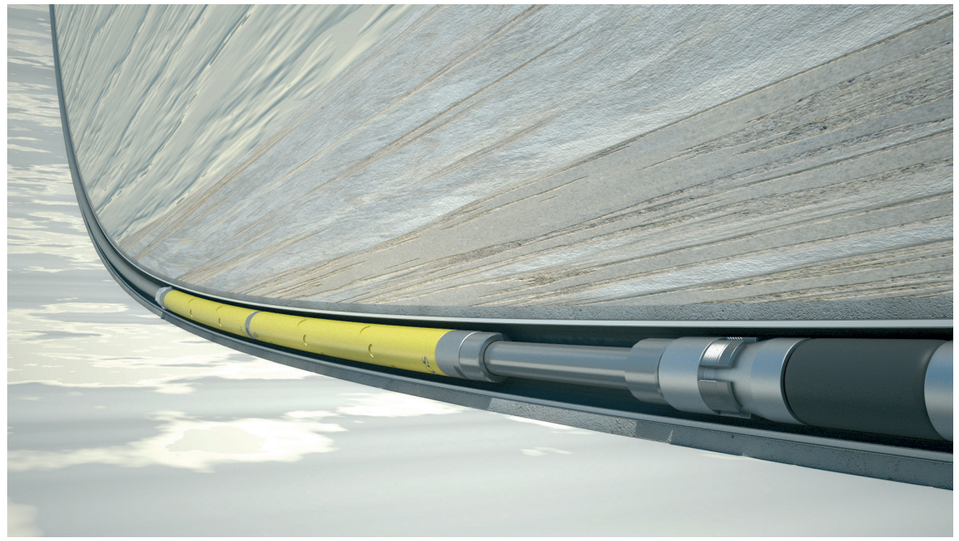

## PERFORATION TECHNOLOGIES FOR MULTI-STAGE HYDROFRACTURING

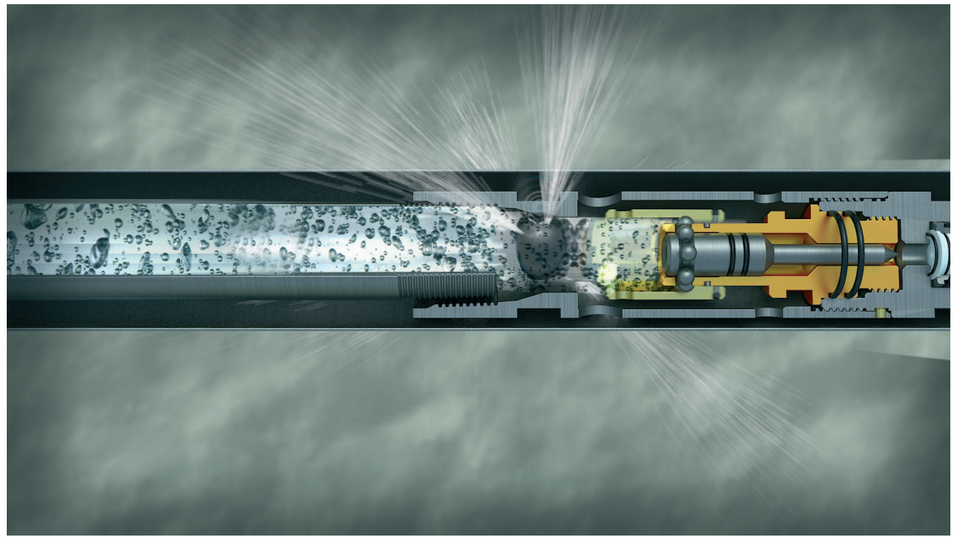

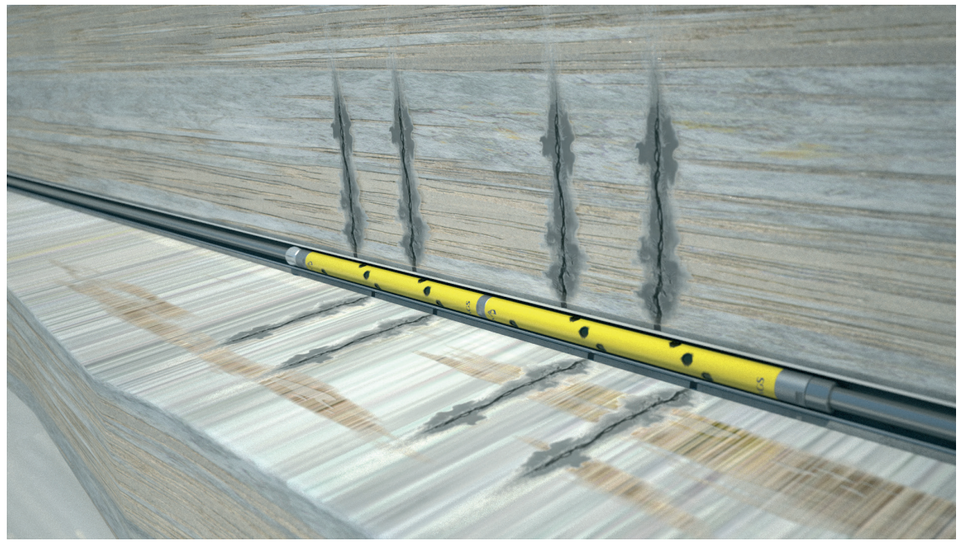

# TUBING PERFORATION IN HORIZONTAL WELLS

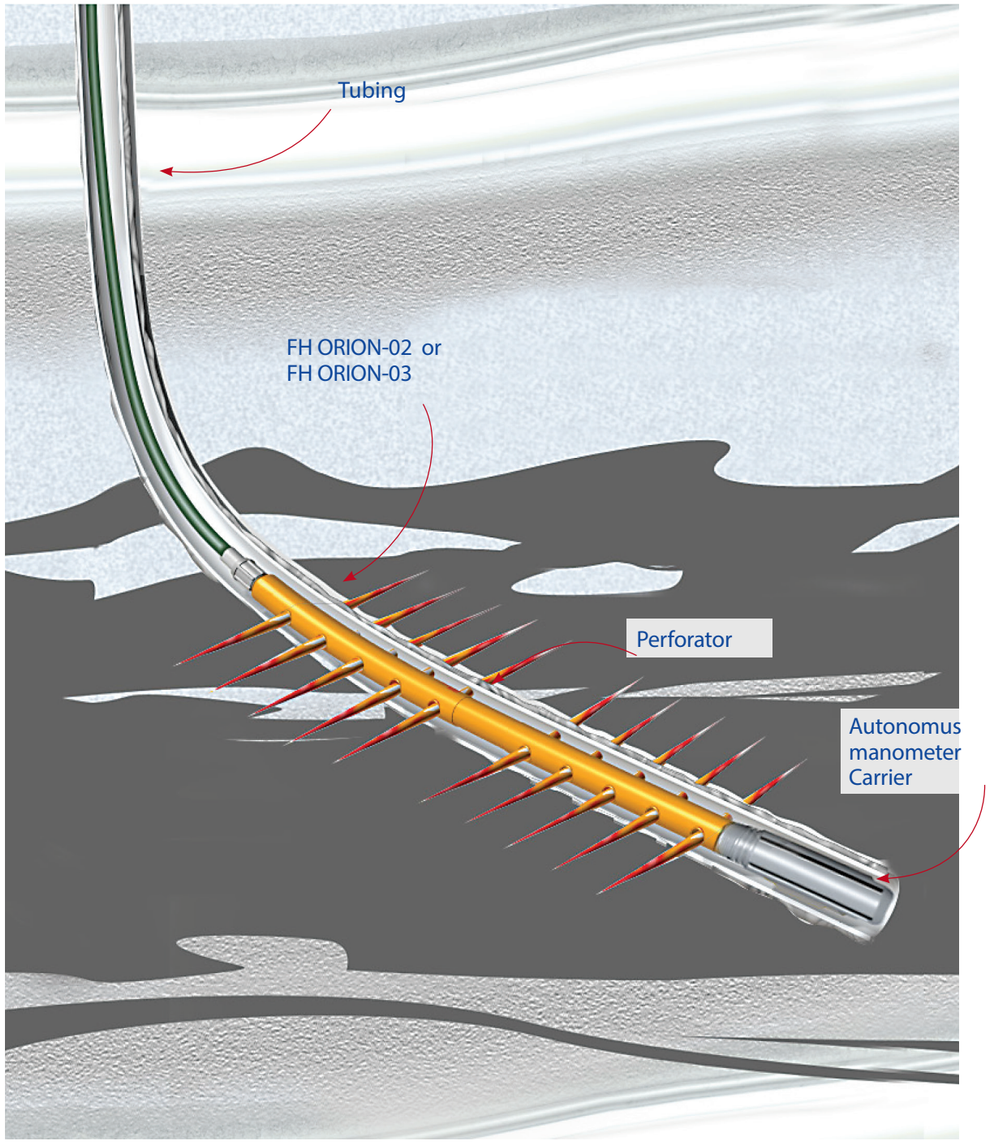

## NOTES



## NOTES

19/4 Magistralnaya Street
Neftekamsk 452683
Bashkortostan
Russian Federation
Tel/fax +7 (34783) 2-05-80
e-mail: info@vzgs.ru
www.vzgs.ru